REVISED

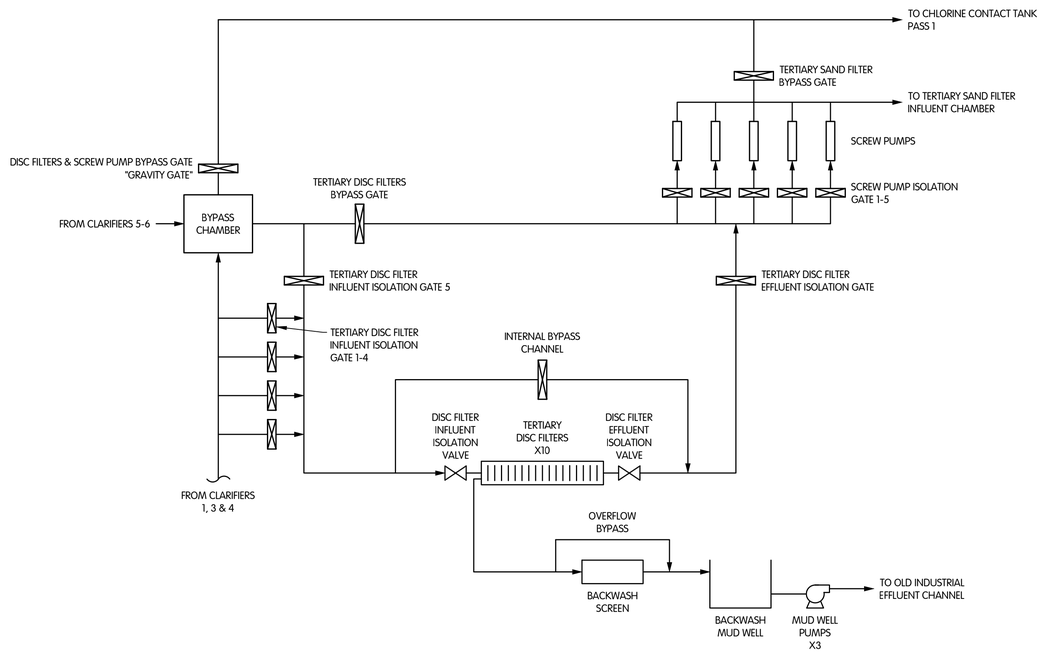

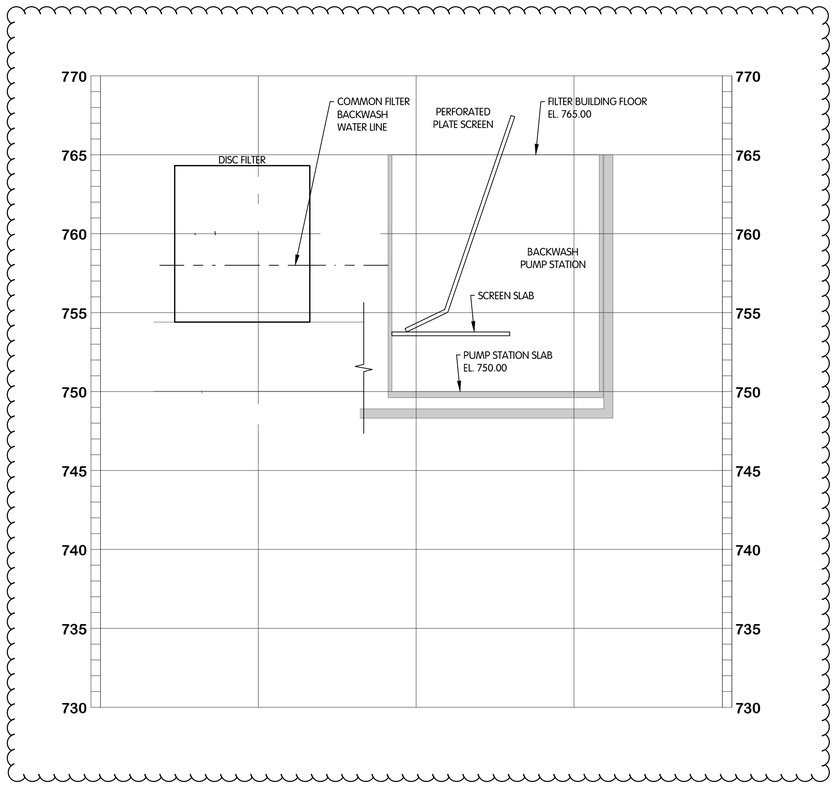

PERFORATED PLATE SCREEN INFORMATION FOR BID
PROCESS FLOW DIAGRAM AND HYDRAULIC PROFILE
TERTIARY TREATMENT PROCESS UPGRADE - KALAMAZOO, MICHIGAN
CONTRACT 75

NO.	DATE	REVISIONS AFTER ISSUED FOR BID	BY
5			
4			
3			
2			
1			

Jones & Henry Engineers, Ltd.
Fluid thinking©.
www.JHeng.com

JOB NO. 017-7593.001
SCALE NONE
DESIGNED PEF | DRAWN RGW | CHECKED PEF
STATUS PRELIMINARY
DATE NOVEMBER 2019
SHEET NO.
IFB-S-H1
1 OF 6

TOL-7592601_IFB-S-HPI-HYDRAULIC PROFILE
11/27/2019 10:43 AM ANDREW.RIVERLEY
5/21/2020 12:43 PM
XREFERENCED FILES:
17592601_H1

REVISED

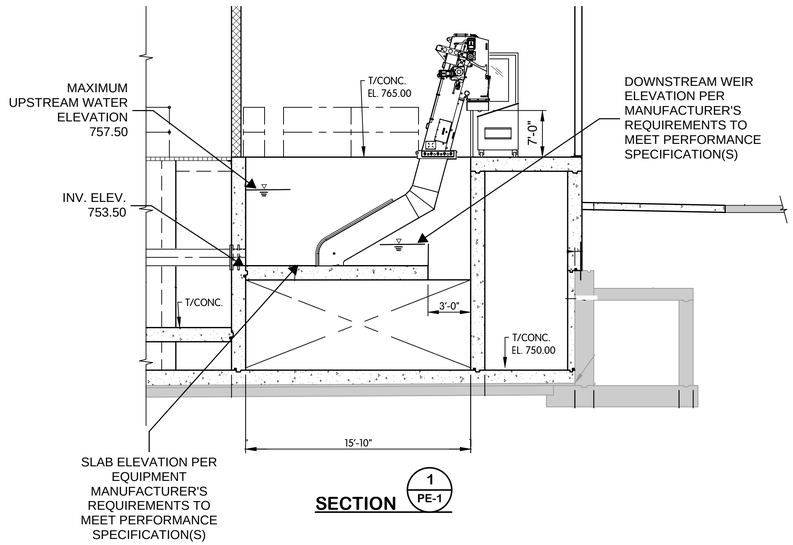

SECTION 1 / PE-1

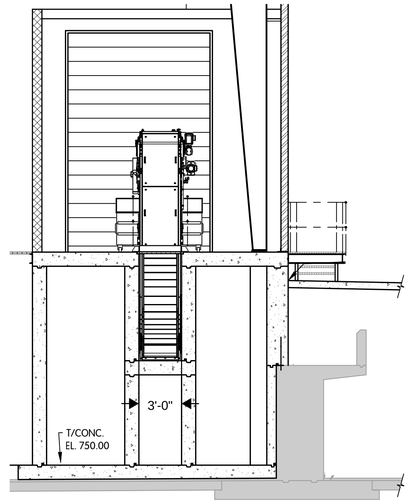

SECTION 2 / PE-1

THE CITY OF Kalamazoo

PERFORATED PLATE SCREEN INFORMATION FOR BID
FINAL SETTLING TANK 2
PIPING AND EQUIPMENT
SECTIONS

TERTIARY TREATMENT PROCESS UPGRADE - KALAMAZOO, MICHIGAN
CONTRACT 75

NO.	DATE	REVISIONS AFTER ISSUED FOR BID	BY
5			
4			
3			
2			
1			

Jones & Henry Engineers, Ltd.

Fluid thinking®
www.JHeng.com

JOB NO. 017-7593.001

SCALE NOT TO SCALE

DESIGNED	DRAWN	CHECKED
PEF	RGW	PEF

STATUS: PRELIMINARY

DATE: NOVEMBER 2019

SHEET NO.

IFB-S-PE2

3 OF 6

TOL-7593001_IFB-S-PE1-SECTION
5/20/2020 9:00 AM - RWORLEY
5/21/2020 12:44 PM
XREFERENCED FILES: