MANAGEMENT SERVICES DEPARTMENT
PURCHASING DIVISION
241 W. South Street
Kalamazoo, Michigan 49007-4796
Telephone (269) 337-8020
cokpurchasing@kalamazoocity.org

ADDENDUM #1

September 16, 2025

TO:	**ALL Prospective Bidders**
PROJECT:	**Asphalt & Paving - Crosstown Parkway Remodel**
QUOTE REFERENCE NO:	**91396-024.0**
QUOTE RETURN DATE:	**September 24, 2025, by end of business day (4:30 p.m. Local Time ET)**

The purpose of this addendum is to clarify and/or modify the Drawings and/or Specifications for this project. All work affected is subject to all applicable terms and conditions of the Bidding and Contract Documents.

1. **QUESTIONS FROM SEPTEMBER 15, 2025, WALKTHROUGH/SITE INSPECTION provided by AVB – See *Attachment #1***

Questions related to this addendum may be addressed to Tyler Dundore, AVB at tdundore@avbinc.com.

The Addendum can be viewed and downloaded from the City's website at https://www.kalamazoocity.org/bidopportunities.

In order for a bid to be responsive, this signed and dated addendum must be returned with your bid. If you have already submitted your bid, acknowledge receipt and acceptance of this addendum by signing in the place provided and returning it to the undersigned and it shall be incorporated in your bid. Please identify your return envelope with the bid reference number and project description.

Sincerely,

Michelle Emig
Purchasing Division Manager

FIRM: _____ SIGNED: _____

NAME: _____ DATE: _____
(Type or Print)

ADDENDUM #1

Attachment #1

Questions from September 15, 2025, Walkthrough/Site

Bid Reference #: 91396-024.0

City of Kalamazoo Crosstown

Kalamazoo, MI
AVB-23-062

AD 01 00
ADDENDUM #1

This Article is noted as **Addendum No.** 1**, dated 09/16/2025**, to the **City of Kalamazoo Crosstown**, . Update bid documents as necessary with the enclosed information to ensure that a complete turnkey work scope is included at bid time. Each Bidder/Contractor/Sub-Contractor will be held responsible for reading and adhering to any and all data as found within the following pages.

AD 01 01 Pre-Bid RFIs

1.1. See the following attachments for the below noted Pre-Bid RFIs:
1. Pre-Bid RFIs #: Subst-1, Subst-2, PreBid-1, PreBid-2, PreBid-3, PreBid-4, PreBid-5

AD 01 02 AVB Write-Up/Work Scope Changes

1.1. Reminder that the bid is due to the City of Kalamazoo per the bidding instructions.

1.2. Please review all required bid documents that must be submitted for a bid to be considered.

AD 01 03 Intersect Studios Write-up/Document(s) Issued

End of Addendum #1 Write Up.

See the Following Pages for Attachments.

AVB Construction, LLC

Printed on Tue Sep 16, 2025 at 02:59 pm EDT

Job #: AVB-23-062 City of Kzoo - Crosstown Facility
150 E Crosstown Parkway
Kalamazoo, Michigan 49001

RFI LOG

#	Subject	Status	Responsible Contractor	Received From	Date Initiated	RFI Manager	Assignee	Ball In Court	Due Date	Closed Date	Location	Schedule Impact	Cost Impact	Cost Code	Sub Job	RFI Stage	Distribution List	Private
Subst-2	Gerber Plumbing Fixtures	Closed	AVB Construction,...	Dundore, Tyler (AVB Construction, LLC)	09/16/2025	Tyler Dundore	Reed, Lindsay (In... Toth, Madeline (I...		09/19/2025	09/16/25							Michelle Emig (City of Kalamazoo), Tom DenHarder (City of Kalamazoo), Obaid Hakimi (AVB Construction, LLC)	No

Q:
Tyler Dundore Sent Tue Sep 16, 2025 at 11:09 am EDT
Gerber Plumbing fixtures have been proposed as an alternate to the specified plumbing fixtures and faucets.
Gerber is a manufacturer of plumbing products including toilets, sinks, faucets, and shower solutions, for the kitchen and bath industry.

Please see the attached documents to determine if this is an acceptable alternate.
Gerber Substitution Request.pdf

see pages 7-18 for approved alternate plumbing fixture specification

A:
Madeline Toth (Intersect Studio) Responded Tue Sep 16, 2025 at 02:33 pm EDT
Please see attached RFI with comments. The substitution is approved as noted. SH-1 and SH-2 do not require a tub spout.
Gerber Substitution Request 2.pdf

Subst-1	Fire Alarm Specification	Closed	AVB Construction,...	Dundore, Tyler (AVB Construction, LLC)	09/15/2025	Tyler Dundore	Toth, Madeline (I... Reed, Lindsay (In...		09/16/2025	09/16/25							Michelle Emig (City of Kalamazoo), Tom DenHarder (City of Kalamazoo), Obaid Hakimi (AVB Construction, LLC)	No

Q:
Tyler Dundore Sent Mon Sep 15, 2025 at 03:18 pm EDT
National Time is not listed in the specs for the fire alarm. Would it be possible to get written into the specs for this job?

A:
Madeline Toth (Intersect Studio) Responded Tue Sep 16, 2025 at 10:17 am EDT
No. Comply with manufacturers listed in spec

PreBid-5	Data and Fiber Cabling	Open	AVB Construction,...	Dundore, Tyler (AVB Construction, LLC)	09/16/2025	Tyler Dundore	Reed, Lindsay (In... Toth, Madeline (I...	Reed, Lindsay (In... Toth, Madeline (I...	09/19/2025								Obaid Hakimi (AVB Construction, LLC)	No

Q:
Tyler Dundore Sent Tue Sep 16, 2025 at 02:43 pm EDT
How many drops per location besides the 3 rooms noted as three cables. Does every other triangle location, AP, Camera, Data triangle only get 1 cable?

Fiber
What type: singlemode, multimode OM3, OM4?
How many strand?
Is armored allowed?
IS LC the connector termination desired?
Is there a rack or some other mount needed to house the fiber in room 157?

answer has not been received at the time this document was issued.

PreBid-4	Controls on reused VAV's	Closed	AVB Construction,...	Dundore, Tyler (AVB Construction,	09/16/2025	Tyler Dundore	Reed, Lindsay		09/16/	09/16/25							Michelle Emig (City of Kalamazoo), Tom DenHarder (City of Kalamazoo), Obaid Hakimi (AVB Construction, LLC)	No

#	Subject	Status	Responsible Contractor	Received From	Date Initiated	RFI Manager	Assignee	Ball In Court	Due Date	Closed Date	Location	Schedule Impact	Cost Impact	Cost Code	Sub Job	RFI Stage	Distribution List	Private
				LLC)			(In... Toth, Madeline (I...		2025									

Q: Tyler Dundore Sent Tue Sep 16, 2025 at 09:37 am EDT
Will the VAV's that are being reused need new controls installed on them before we re-install them? Or is the contractor to use the existing controls even if it need to be a separate system?

A: Madeline Toth (Intersect Studio) Responded Tue Sep 16, 2025 at 01:49 pm EDT
Intent is for the controls for the reused VAV boxes to be re-used so long as they are compatible with the new controls system. If they are not able to integrate into the new controls system then they will need to be replaced.

PreBid-3	Hollow Metal Door RFI's	Closed	AVB Construction,...	Dundore, Tyler (AVB Construction, LLC)	09/15/2025	Tyler Dundore	Toth, Madeline (I... Reed, Lindsay (In...		09/16/2025	09/16/25							Michelle Emig (City of Kalamazoo), Tom DenHarder (City of Kalamazoo), Obaid Hakimi (AVB Construction, LLC)	No

Q: Tyler Dundore Sent Mon Sep 15, 2025 at 03:52 pm EDT

1. The door schedule on sheet A401 lists openings 106B & 106C as 5-0 x 6-8 door openings, but the remarks column notes that they should be (2) 3-0 doors. Should these be pairs of 2-6 x 6-8 doors, or pairs of 3-0 x 6-8 doors?

1. Please confirm you will be reusing existing doors at opening 347A. Also, is a new frame needed at opening 347A, or will you be reusing the existing frame?

1. Openings E267 & E267A are existing aluminum doors. I intend to quote the hardware for these doors to the aluminum door supplier. Please let me know if this is acceptable.

1. Please confirm you will be reusing the door and frame at opening E302A.

1. Opening 108 is scheduled as a pair of 4-2 x 7-2 doors. However, the floor plan and frame elevation F13 appear to show a single sliding door. Please let us know what is needed for this opening.

1. Opening 128 is scheduled as a pair of 3-2 x 7-2 doors. However, the floor plan and frame elevation F16 appear to show a single sliding door. Please let us know what is needed for this opening.

1. Openings 131, 132, 133 & 134 are scheduled as pairs of 4-2 x 7-2 doors. However, the floor plan and frame elevation F13 appear to show a single sliding door. Please let us know what is needed for these openings.

1. Openings 135 & 136 are scheduled as pairs of 3-8 x 7-2 doors. However, the floor plan and frame elevation F15 appear to show a single sliding door. Please let us know what is needed for these openings.

1. Opening 157 is scheduled as a pair of 3-8 x 7-2 doors. However, the floor plan and frame elevation F15 appear to show a single sliding door. Please let us know what is needed for this opening.

#	Subject	Status	Responsible Contractor	Received From	Date Initiated	RFI Manager	Assignee	Ball In Court	Due Date	Closed Date	Location	Schedule Impact	Cost Impact	Cost Code	Sub Job	RFI Stage	Distribution List	Private

1. Openings 188 & 189 are in wall type AB. I don't see wall type AB on sheet A103. Please provide wall type information.

1. Mandatory Alternate #2 in Work Scope 08.100 Doors & Hardware says to provide a deduct to furnish PLAM doors in lieu of wood veneer doors. Please provide PLAM manufacturer and color. The PLAM prices can vary quite a bit, depending on manufacturer & color.

1. General note #5 on sheet A401 says to re-key all lock cores in existing doors to remain (coordinate with Owner's Locksmith). I intend to exclude this from my bid because it sounds like the owner already has a locksmith that they use. Is this acceptable?

1. The following openings are Interior All-Glass Entrances (sliding door systems): 108, 128, 131, 132, 133, 134, 135, 136, 141, 142 & 157. The spec (084126.23) lists Tubelite as an acceptable manufacturer. Can these be supplied by the Aluminum / Glass / Glazing contractor? I believe they will get a better price because they are already supplying Tubelite material for the rest of the job (see General Note #1 on sheet A401). Please confirm that the Aluminum / Glass / Glazing contractor can supply the doors, frames, and hardware at these openings.

1. Are power supplies needed for any of the openings that have electrified hardware? Will the security contractor supply all power supplies that may be needed?

1. Opening E221 is a double egress style opening. I suggest changing the exit devices to surface vertical rod exit devices – less bottom rod. Do you want to make this change?

1. I suggest changing the exit devices to surface vertical rod exit devices – less bottom rod at opening 191B. Do you want to make this change?

1. I noticed there is a Power Door Operator specification (087113) in the contract documents. The hardware sets do not list any power door operators. Does the project require any power door operators?

A:

Madeline Toth (Intersect Studio) Responded Tue Sep 16, 2025 at 11:21 am EDT
1. The door schedule on sheet A401 lists openings 106B & 106C as 5-0 x 6-8 door openings, but the remarks column notes that they should be (2) 3-0 doors. Should these be pairs of **2-6 x 6-8** doors, or pairs of 3-0 x 6-8 doors?
Response: 2'-6" x 6'x8".

2. Please confirm you will be reusing existing doors at opening 347A. Also, is a new frame needed at opening 347A, or will you be reusing the existing frame?
Response: Specific doors and frames have been called out to be salvaged for reuse on demo sheets. (Keynote 21). The intent is that this door and frame will be salvaged from existing.

3. Openings E267 & E267A are existing aluminum doors. I intend to quote the hardware for these doors to the aluminum door supplier. Please let me know if this is acceptable.
Response: Yes. Hardware by Aluminum/Glass/Glazing subcontractor.

4. Please confirm you will be reusing the door and frame at opening E302A.
Response: Yes.

5. Opening 108 is scheduled as a pair of 4-2 x 7-2 doors. However, the floor plan and frame elevation F13 appear to show a single sliding door. Please let us know what is needed for this opening.
Response: Follow door frame elevations as shown per door schedule. Doors to be 7' high by 3'-4" wide. It is a single sliding door, the door width shown in door schedule is the width of the drywall opening.

6. Opening 128 is scheduled as a pair of 3-2 x 7-2 doors. However, the floor plan and frame elevation F16 appear to show a single sliding door. Please let us know what is needed for this opening.
Response: Follow door frame elevations as shown per door schedule. Doors to be 7' high by 3'-4" wide. It is a single sliding door, the door width shown in door schedule is the width of the drywall opening.

#	Subject	Status	Responsible Contractor	Received From	Date Initiated	RFI Manager	Assignee	Ball In Court	Due Date	Closed Date	Location	Schedule Impact	Cost Impact	Cost Code	Sub Job	RFI Stage	Distribution List	Private
	7. Openings 131, 132, 133 & 134 are scheduled as pairs of 4-2 x 7-2 doors. However, the floor plan and frame elevation F13 appear to show a single sliding door. Please let us know what is needed for these openings. Response: Follow door frame elevations as shown per door schedule. Doors to be 7' high by 3'-4" wide. It is a single sliding door, the door width shown in door schedule is the width of the drywall opening. 8. Openings 135 & 136 are scheduled as pairs of 3-8 x 7-2 doors. However, the floor plan and frame elevation F15 appear to show a single sliding door. Please let us know what is needed for these openings. Response: Follow door frame elevations as shown per door schedule. Doors to be 7' high by 3'-4" wide. It is a single sliding door, the door width shown in door schedule is the width of the drywall opening. 9. Opening 157 is scheduled as a pair of 3-8 x 7-2 doors. However, the floor plan and frame elevation F15 appear to show a single sliding door. Please let us know what is needed for this opening. Response: Follow door frame elevations as shown per door schedule. Doors to be 7' high by 3'-4" wide. It is a single sliding door, the door width shown in door schedule is the width of the drywall opening. 10. Openings 188 & 189 are in wall type AB. I don’t see wall type AB on sheet A103. Please provide wall type information. Response: Wall Type A1B. 11. Mandatory Alternate #2 in Work Scope 08.100 Doors & Hardware says to provide a deduct to furnish PLAM doors in lieu of wood veneer doors. Please provide PLAM manufacturer and color. The PLAM prices can vary quite a bit, depending on manufacturer & color. Response: See finish schedule on sheet I401. Door finishes in schedule specify a matching laminate. The laminate spec can also be found in the finish schedule. 12. General note #5 on sheet A401 says to re-key all lock cores in existing doors to remain (coordinate with Owner’s Locksmith). I intend to exclude this from my bid because it sounds like the owner already has a locksmith that they use. Is this acceptable? Response: Yes. Keying is by Owner. 13. The following openings are Interior All-Glass Entrances (sliding door systems): 108, 128, 131, 132, 133, 134, 135, 136, 141, 142 & 157. The spec (084126.23) lists Tubelite as an acceptable manufacturer. Can these be supplied by the Aluminum / Glass / Glazing contractor? I believe they will get a better price because they are already supplying Tubelite material for the rest of the job (see General Note #1 on sheet A401). Please confirm that the Aluminum / Glass / Glazing contractor can supply the doors, frames, and hardware at these openings. Response: SC WD Doors and hardware by Doors and Hardware subcontractor. Aluminum frames, mounting / rolling hardware and glazing by Aluminum / Glass / Glazing subcontractor, BOD based on Note #3 on sheet A401. 14. Are power supplies needed for any of the openings that have electrified hardware? Will the security contractor supply all power supplies that may be needed? Response: Power supplies to be furnished by this subcontractor (Doors & Hardware). Installation by Electrical. 15. Opening E221 is a double egress style opening. I suggest changing the exit devices to surface vertical rod exit devices – less bottom rod. Do you want to make this change? Response: This is an existing door with existing door hardware and exit devices to remain. 16. I suggest changing the exit devices to surface vertical rod exit devices – less bottom rod at opening 191B. Do you want to make this change? Response: Intersect takes no exception, as long as it meets fire rating requirements and is compatible with hold-open device and emergency release. 17. I noticed there is a Power Door Operator specification (087113) in the contract documents. The hardware sets do not list any power door operators. Does the project require any power door operators. Response: ADA push door actuator at doors 170A, 170B, and 171B. See electrical drawings for locations.																
PreBid-2	Scissor Lift Use on 2nd Floor	Closed	AVB Construction,...	Dundore, Tyler (AVB Construction, LLC)	09/15/2025	Tyler Dundore	Reed, Lindsay (In... Hakimi, Obaid (AV... Toth, Madeline (I...		09/16/2025	09/16/25								No
				Tyler Dundore Sent Mon Sep 15, 2025 at 03:25 pm EDT **Q:** There is an exterior wall being opened up for new windows, can this be used as access to get a scissor lift in and out of the building for all overhead work on the second floor? - AVB														

AVB Construction, LLC

Printed on Tue Sep 16, 2025 at 02:59 pm EDT

Job #: AVB-23-062 City of Kzoo - Crosstown Facility
150 E Crosstown Parkway
Kalamazoo, Michigan 49001

#	Subject	Status	Responsible Contractor	Received From	Date Initiated	RFI Manager	Assignee	Ball In Court	Due Date	Closed Date	Location	Schedule Impact	Cost Impact	Cost Code	Sub Job	RFI Stage	Distribution List	Private
	Is the service elevator rated for a 3,100lb scissor lift? - AVB Please confirm the structural integrity of the floor can handle the load of the 3,100lb scissor lift. - Intersect																	
	A: Tyler Dundore (AVB Construction, LLC) Responded Tue Sep 16, 2025 at 09:58 am EDT Service Elevator is rated for 6,000lb capacity per AVB's walkthrough with Kzoo. If a scissor lift is able to be located that is less than the 2000lb limit, the service elevator would be an option if the exterior wall is not opened up at the same time.																	
	A: Madeline Toth (Intersect Studio) Responded Mon Sep 15, 2025 at 06:39 pm EDT Equipment and floor loading is indicated in the plan notes (#14 on S100 & S101, and note #10 on S102, S103, & S104). (JDH)																	
	A: Tyler Dundore (AVB Construction, LLC) Responded Tue Sep 16, 2025 at 09:56 am EDT Note #14 on S100/S101, and note #10 on S102/S103/S104 says "Construction loading on the slab shall be limited to 100psf live load or a 2000# equipment load." The scissor lift in question from the contractor therefore is too large and cannot be used on the main floor or the 2nd floor. Contractor will need to find a scissor lift that weighs less that 2000lbs if they would like to use one on this project.																	
PreBid-1	Temp Heating and Cooling Costs	Closed	AVB Construction,...	Dundore, Tyler (AVB Construction, LLC)	09/15/2025	Tyler Dundore	Hakimi, Obaid (AV...		09/18/2025	09/16/25								No
	Q: Tyler Dundore Sent Mon Sep 15, 2025 at 03:22 pm EDT During demolition of the existing hot water heating lines, there will be multiple areas left without heat. Who is responsible for temporary heating and cooling costs? Would it be advantageous to have an allowance for this?																	
	A: Obaid Hakimi (AVB Construction, LLC) Responded Mon Sep 15, 2025 at 03:39 pm EDT AVB will carry an allowance for temporary heating and cooling during demolition. Contractor shall coordinate outages, provide necessary temporary systems, and bill against the allowance on a T&M basis with AVB approval.																	

SUBSTITUTION REQUEST
(During the Bidding/Negotiating Phase)

PROJECT: Crosstown CPED

SUBSTITUTION REQUEST NUMBER: G-1

FROM: Balfrey-Johnston, Inc

TO: AVB Contruction
Tyler Dundore

DATE: 9/15/25

A/E PROJECT NUMBER: 23-046

RE: Substitution Request-Plumbing Fixtures

CONTRACT FOR: Plumbing

SPECIFICATION TITLE: City of Kalamazoo Crosstown Facility

DESCRIPTION: Plumbing Fixtures

SECTION: 22 4000 **PAGE:**

ARTICLE/PARAGRAPH: 2.3 Lavatories

PROPOSED SUBSTITUTUION: Gerber Plumbing

MANUFACTURER: Gerber Plumbing **ADDRESS:** 2500 Internationale, Woodbridge, IL **PHONE:** 866-538-5536

TRADE NAME: Navien **MODEL NO.:** Various to equal schedule

Attached data includes product description, specifications, drawings, photographs, and performance and test data adequate for evaluation of the request; applicable portions of the data are clearly identified.
Attached data also includes a description of changes to the Contract Documents that the proposed substitution will require for its proper installation.

The Undersigned certifies:
- Proposed substitution has been fully investigated and determined to be equal or superior in all respects to specified product.
- Same warranty will be furnished for proposed substitution as for specified product.
- Same maintenance service and source of replacement parts, as applicable, is available.
- Proposed substitution will have no adverse effect on other trades and will not affect or delay progress schedule.
- Proposed substitution does not affect dimensions and functional clearances.
- Payment will be made for changes to building design, including A/E design, detailing, and construction costs caused by the substitution.

SUBMITTED BY: Dick Vredevoogd, Specification and Project Manager

SIGNED BY: Dick Vredevoogd

FIRM:

ADDRESS: 13050 Northend Ave Oak Park MI 48237

TELEPHONE: 248-384-8781

A/E's REVIEW AND RECOMMENDATION:

- ☐ Approve Substitution—Make submittals in accordance with Specification Section 01 33 00 Submittal Procedures.
- ☒ Approve Substitution as noted—Make submittals in accordance with Specification Section 01 33 00 Submittal Procedures.
- ☐ Reject Substitution—Use specified materials.
- ☐ Substitution Request received too late—Use specified materials.

SIGNED BY: Josilyn Welch **DATE:** 9/16/25

SUPPORTING DATA ATTACHED: ☐ Drawings ☒ Product Data ☐ Samples ☐ Tests ☐ Reports ☐

CSI Form 1.5C (August 2020 version)

© 2020 The Construction Specifications Institute (CSI)

L-1 & 3

LOGAN SQUARE™
Petite Undermount Sink

Features:

G0012765

- Vitreous China
- Undermount Sink
- ADA compliant
- Front Overflow
- Rectangular design with curved basin
- No faucet holes; wall-mount or deck-mounted faucet required for installation
- Faucet and drain not included
- Anchoring Kit sold separately

Technical Information:

Configuration	Petite Undermount Sink
Height	6 5/8"
Width	18 3/4"
Depth	14 3/4"
Inside Basin	16 3/4" x 12 13/16"
Shipping Weight	18.3 lbs

Accessories To Be Purchased Separately:

- G0099190 Anchoring Kit

Available Colors:

- White
- Other: Refer to Price Book for additional colors/finishes

Warranty:

- Limited Lifetime on Vitreous China, refer to the website for more details.

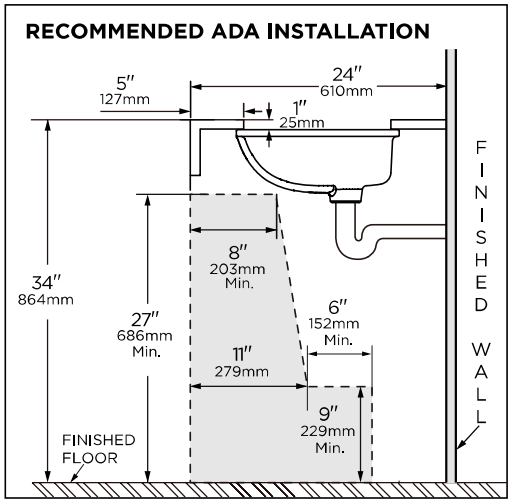

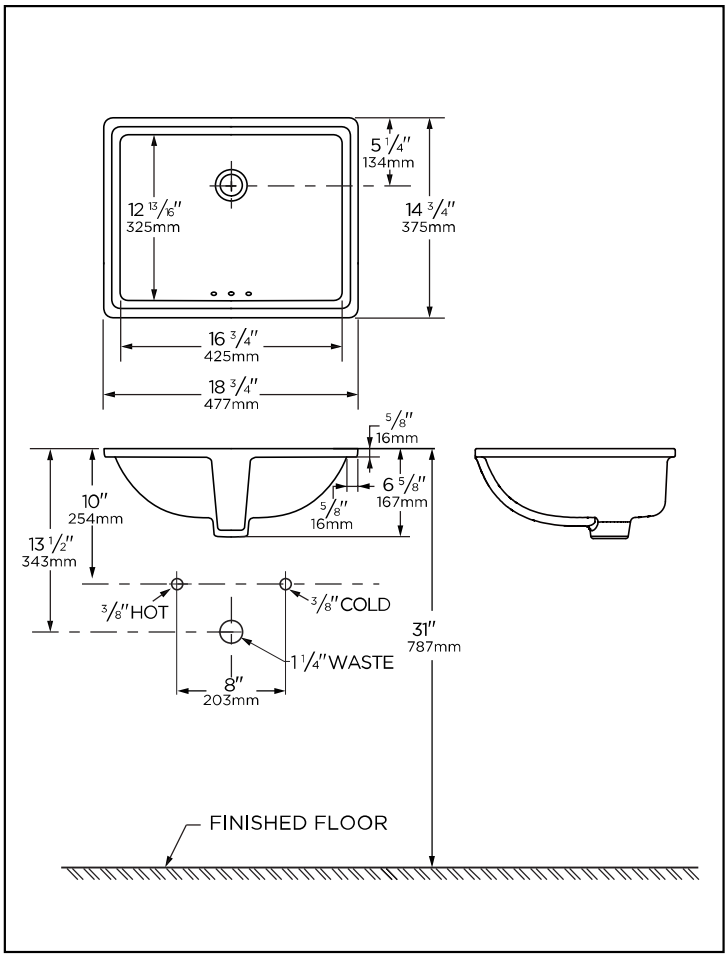

NOTES: All dimensions are in inches and millimeters. Illustrations may not be drawn to scale.

IMPORTANT:
Dimensions of fixtures are nominal and may vary within the range of tolerances established by ASME standard A112.19.2/CSA B45.1
PLUMBERS NOTE: The sealing compound containing oil should never be used when installing basin under a marble slab.
Due to variation in ware, we recommend using basin as a template. Anchoring device furnished only when specified.

Because we are committed to continual product improvement, specifications are subject to change without notice. 07/22

© 2020 Gerber Plumbing Fixtures LLC. All rights reserved gerber-us.com gerber-ca.com

L-2

GERBER

WICKER PARK™
Wheelchair, Wall Hung Sink

Features:
G0012592

- Vitreous China
- ADA compliant
- Rear Overflow
- Rectangular design with curved basin
- Fast Aligning One-Piece Wall Hanger G0099161 Included
- Faucet and Drain not included

Technical Information:

Configuration	Single Hole
Height	7″
Width	24 5/8″
Depth	19 1/8″
Inside Basin	20 5/8″ x 12 3/8″
Shipping Weight	46.1 lbs

Accessories To Be Purchased Separately:
N/A

Available Colors:
- White
- Other: Refer to Price Book for additional colors/finishes

Warranty:
- Limited Lifetime on Vitreous China, refer to the website for more details.

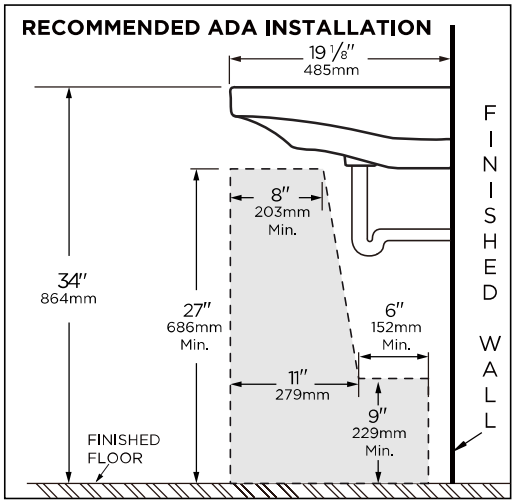

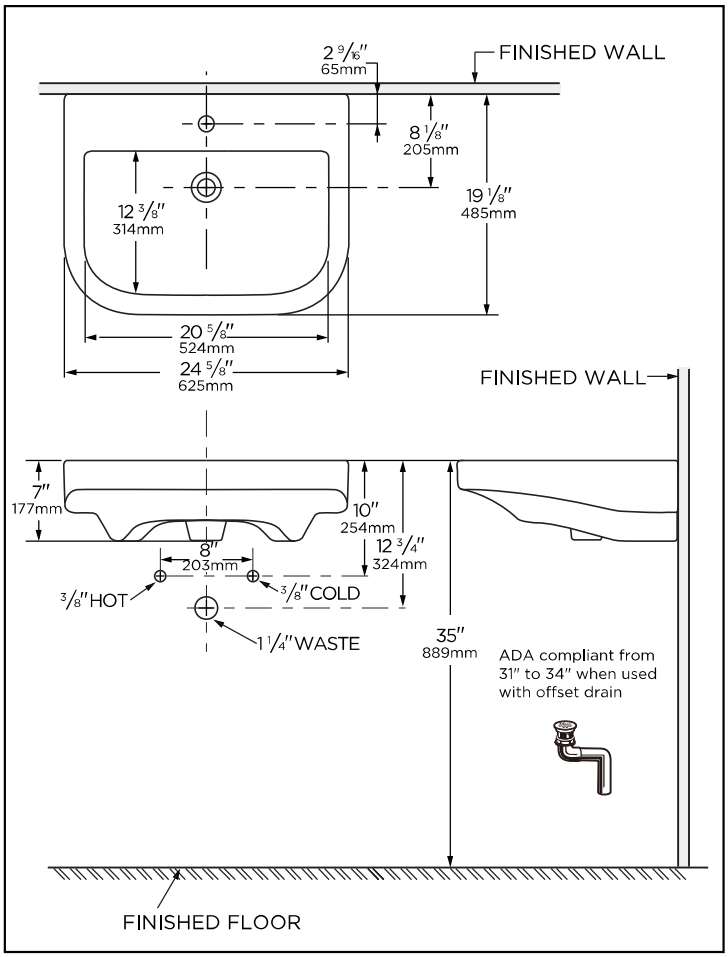

NOTES: All dimensions are in inches and millimeters. Illustrations may not be drawn to scale.

IMPORTANT:
Dimensions of fixtures are nominal and may vary within the range of tolerances established by ASME standard A112.19.2/CSA B45.1

PLUMBERS NOTE: Provide suitable reinforcement for all wall supports.

Because we are committed to continual product improvement, specifications are subject to change without notice. 07/22

© 2020 Gerber Plumbing Fixtures LLC. All rights reserved gerber-us.com gerber-ca.com

S-1, 2 4

GERBER

D457230
Amalfi™
Single Handle Pull-Down Kitchen Faucet

SPECIFICATIONS

Features/Benefits

- SnapBack® Retraction System
- Easily Adjustable GripLock® Weight
- 16 11/16″ Spout Height, 7 13/16″ Spout Reach
- 1.75 gpm (6.6 L/min) Standard Using GA568005N Spray Head
- Alternative Flow Rates Available with Spray / Aerated Water Stream
    - 1.5 gpm (5.7 L/min) When Used with GA56800560N Spray Head
- 2 Function Spray / Aerated Stream
- Ceramic Disc Cartridge
- 360 Degree Swivel Spout
- Single Hole Installation
- Optional Cover Plate, DA607955, Sold Separately

Available Color/Finishes

Color tiles intended for reference only.

		Chrome
	SS	Stainless Steel
	BS	Satin Black

Standards & Certifications

ASME A112.18.1/CSA B125.1
NSF/ANSI/CAN 61: Q≤1
NSF/ANSI/CAN 372
ADA
California Energy Commission (CEC)

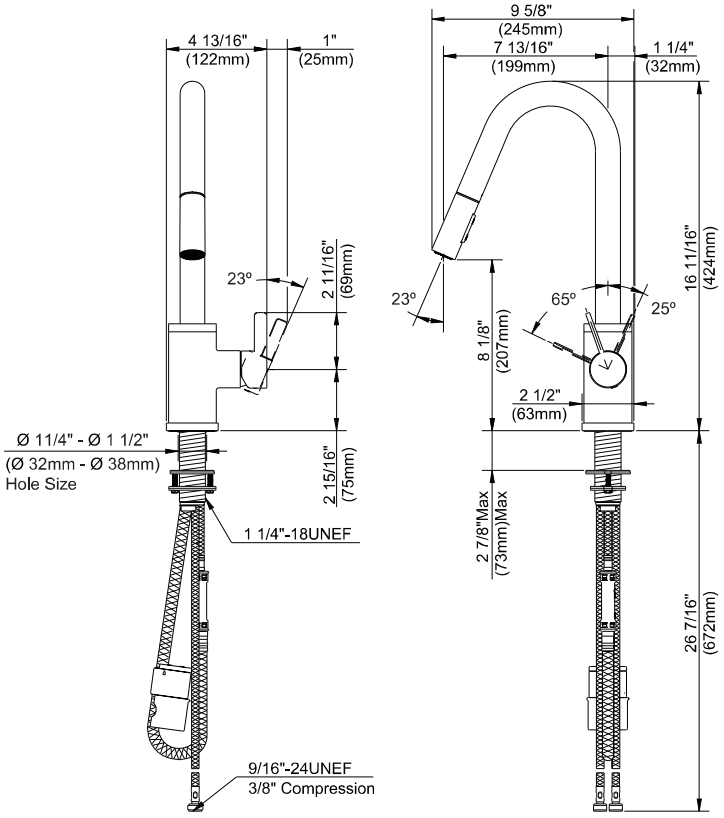

Submittal Information:

Name: _____ Contractor: _____

Location: _____ Contact #: _____

SH-1

GERBER

G00G9155TC
Viper™
Single Handle Tub & Shower Trim Kit & Ceramic Disc Cartridge

SPECIFICATIONS

Features/Benefits

- Diverter on Tub Spout
- Requires Gerber Treysta® Rough-In, G00GS50 Series (Horizontal Inputs) or G00GS52 Series (Vertical Inputs), Sold Separately
- Includes Treysta® Ceramic Disc Pressure Balance Cartridge
- Includes Viper™ Single Function Showerhead, G0049108 1.75 gpm (6.6 L/min) Maximum Flow Rate @ 80psi
- 6″ Metal Shower Arm
- ~~5 1/2″ Tub Spout, D606225~~ NO TUB SPOUT NEEDED
- Finish-Matched Deep Wall Kit, D113001, Sold Separately
- Finish-Matched Shallow Wall Kit, GA663B11, Sold Separately

Available Color/Finishes

Color tiles intended for reference only.

Color	Code	Description
		Chrome
	BN	Brushed Nickel

Standards & Certifications

ASME A112.18.1/CSA B125.1
EPA WaterSense®
ADA for lever handle control
California Energy Commission (CEC)

Flow Rate

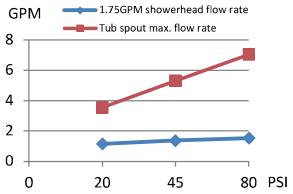

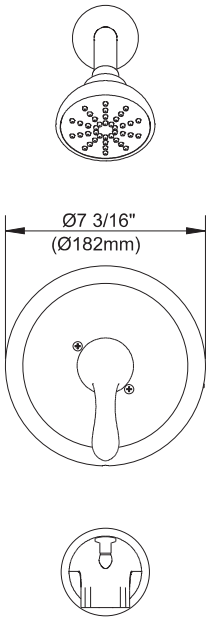

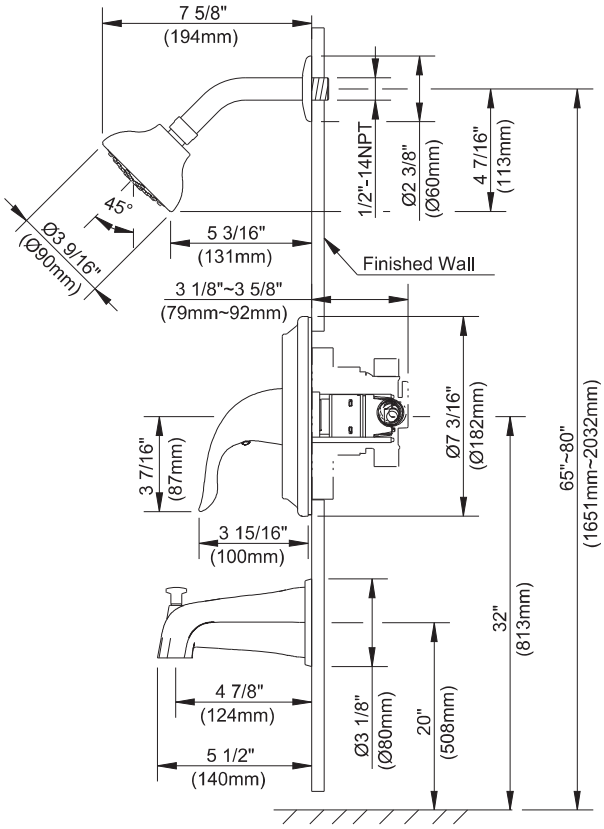

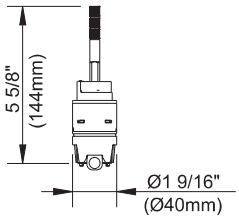

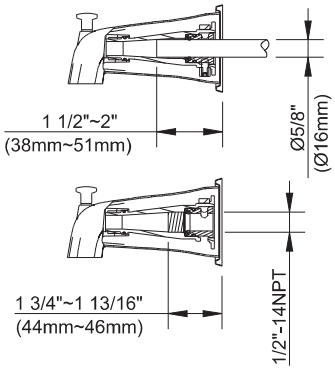

Submittal Information:

Name: _____ Contractor: _____

Location: _____ Contact #: _____

SH-1

GERBER

G00GS504 / G00GS505 / G00GS507
TREYSTA®
Tub and Shower Faucet Rough-In Valve Assembly

SPECIFICATIONS

Use with trim kits for: GERBER

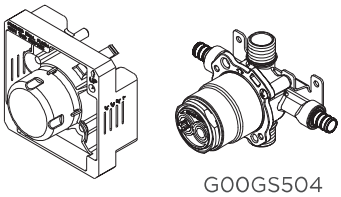

G00GS504

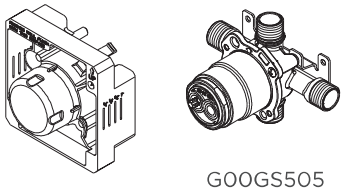

G00GS505

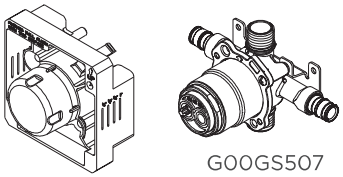

G00GS507

Features/Benefits

- Includes Forged Valve Body, Plaster Guard and Innovative Pressure Test Cap
- Connection Type:
  G00GS504: 1/2″ Crimp PEX Inlets, 1/2″ IPS/Sweat Outlets
  G00GS505: 1/2″ IPS/Sweat Inlets, 1/2″ IPS/Sweat Outlets
  G00GS507: 1/2″ Cold Expansion PEX Inlets, 1/2″ IPS/Sweat Outlets
- Installed Rough-In Can Be Pressure Tested to 150 psi (Air or Water), Mixed or Isolated Inlets, Using Included Pressure Test Plug
- Accommodates Standard, Back-to-Back, and Thin Wall Installations
- Integrated, Easy-Access Mounting System
- Treysta Cartridge Ships with Trim, Sold Separately

SKU# Numbers

G00GS504	Crimp PEX Inlets without Stops
G00GS505	IPS/Sweat Inlets without Stops
G00GS507	Cold Expansion PEX Inlets without Stops

Standards & Certifications

UPC

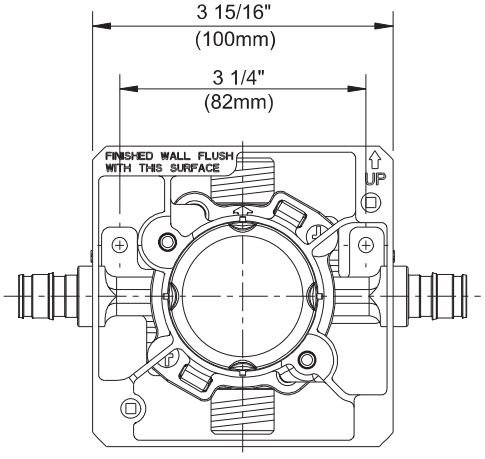

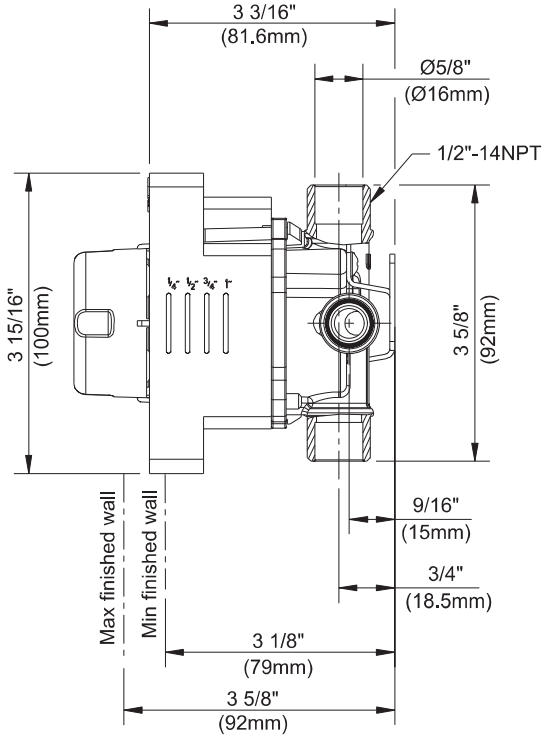

Submittal Information:

Name: _____ Contractor: _____

Location: _____ Contact #: _____

SH-2

G00G9155TC
Viper™
Single Handle Tub & Shower Trim Kit & Ceramic Disc Cartridge

SPECIFICATIONS

Features/Benefits

- Diverter on Tub Spout
- Requires Gerber Treysta® Rough-In, G00GS50 Series (Horizontal Inputs) or G00GS52 Series (Vertical Inputs), Sold Separately
- Includes Treysta® Ceramic Disc Pressure Balance Cartridge
- Includes Viper™ Single Function Showerhead, G0049108 1.75 gpm (6.6 L/min) Maximum Flow Rate @ 80psi
- 6″ Metal Shower Arm
- ~~5 1/2″ Tub Spout, D606225~~ NO TUB SPOUT NEEDED
- Finish-Matched Deep Wall Kit, D113001, Sold Separately
- Finish-Matched Shallow Wall Kit, GA663B11, Sold Separately

Available Color/Finishes

Color tiles intended for reference only.

Color	Code	Description
		Chrome
	BN	Brushed Nickel

Standards & Certifications

ASME A112.18.1/CSA B125.1
EPA WaterSense®
ADA for lever handle control
California Energy Commission (CEC)

Flow Rate

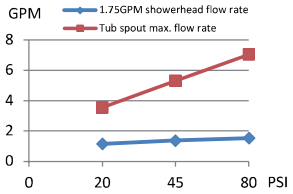

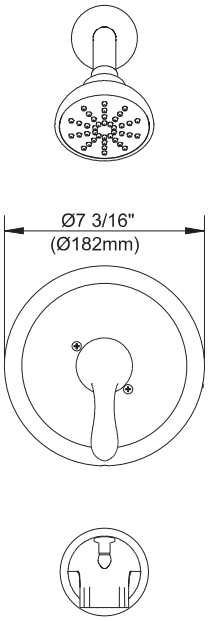

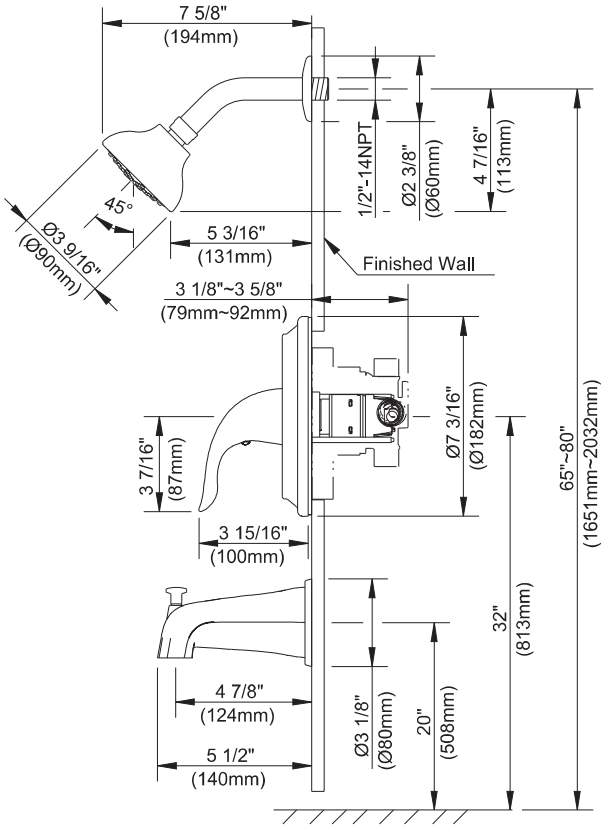

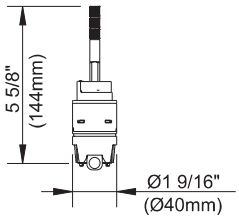

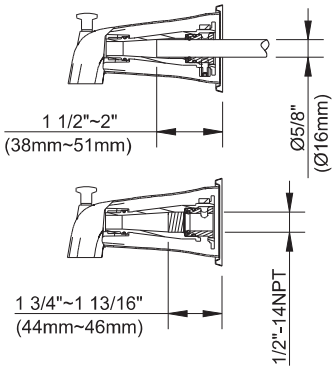

Submittal Information:

Name: _____ Contractor: _____

Location: _____ Contact #: _____

SH-2

GERBER

G00GS504 / G00GS505 / G00GS507
TREYSTA®
Tub and Shower Faucet Rough-In Valve Assembly

SPECIFICATIONS

Use with trim kits for: GERBER

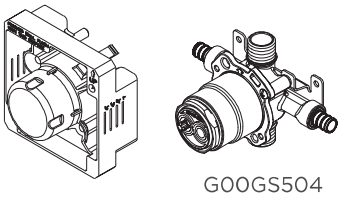

G00GS504

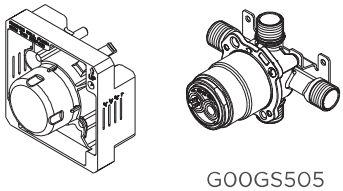

G00GS505

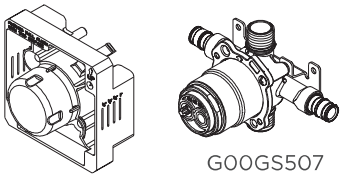

G00GS507

Features/Benefits

- Includes Forged Valve Body, Plaster Guard and Innovative Pressure Test Cap
- Connection Type:
  G00GS504: 1/2″ Crimp PEX Inlets, 1/2″ IPS/Sweat Outlets
  G00GS505: 1/2″ IPS/Sweat Inlets, 1/2″ IPS/Sweat Outlets
  G00GS507: 1/2″ Cold Expansion PEX Inlets, 1/2″ IPS/Sweat Outlets
- Installed Rough-In Can Be Pressure Tested to 150 psi (Air or Water), Mixed or Isolated Inlets, Using Included Pressure Test Plug
- Accommodates Standard, Back-to-Back, and Thin Wall Installations
- Integrated, Easy-Access Mounting System
- Treysta Cartridge Ships with Trim, Sold Separately

SKU# Numbers

G00GS504	Crimp PEX Inlets without Stops
G00GS505	IPS/Sweat Inlets without Stops
G00GS507	Cold Expansion PEX Inlets without Stops

Standards & Certifications

UPC

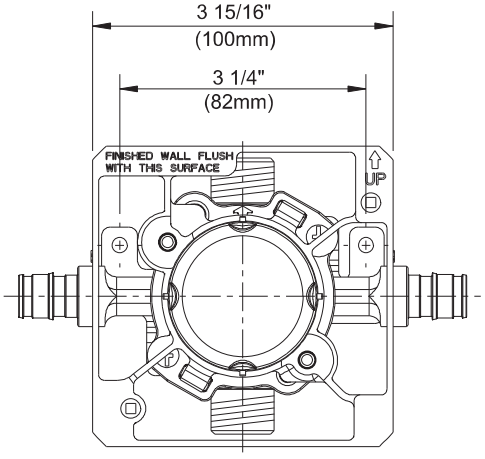

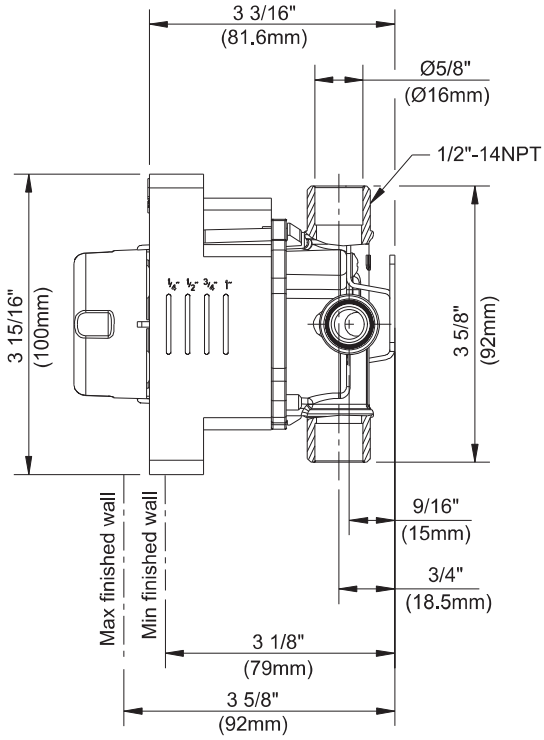

Submittal Information:

Name: _____ Contractor: _____

Location: _____ Contact #: _____

SH-2

GERBER

D560921T
Antioch®
Single Handle Diverter Valve Trim Kit

SPECIFICATIONS

Features/Benefits

- Can Be Used as Trim Only for 1/2" Shower Diverters, 3-Port/ 2-Outlet or 4-Port/ 3-Outlet
- Requires Single Handle 4 Position Diverter Valve, D130510BT, or Single Handle 3 Position Diverter Valve, D130515BT, or Single Handle 8 Position Diverter Valve, D130010BT, Sold Separately
- Deep Wall Extension Kit, D130011B, Sold Separately
- Includes Escutcheon and Control Handle Assembly

Available Color/Finishes

Color tiles intended for reference only.

Color	Code	Description
		Chrome
	BN	Brushed Nickel
	BS	Satin Black

Standards & Certifications

ASME A112.18.1/CSA B125.1
ADA for lever handle control

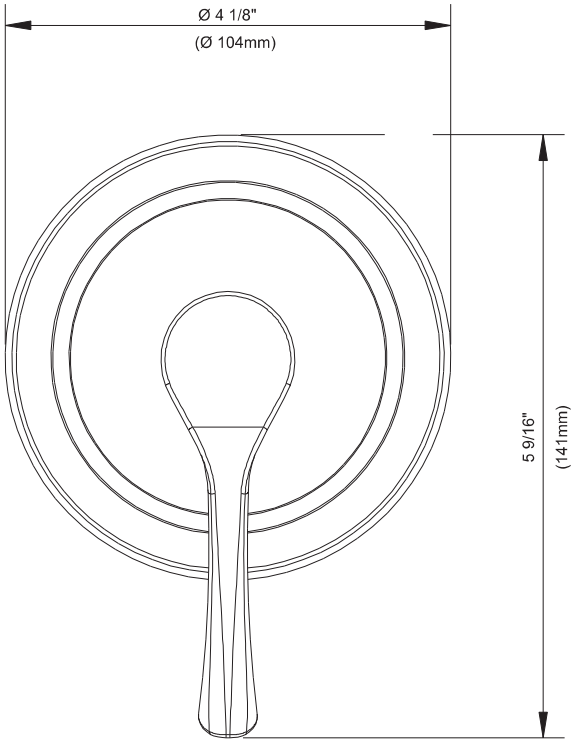

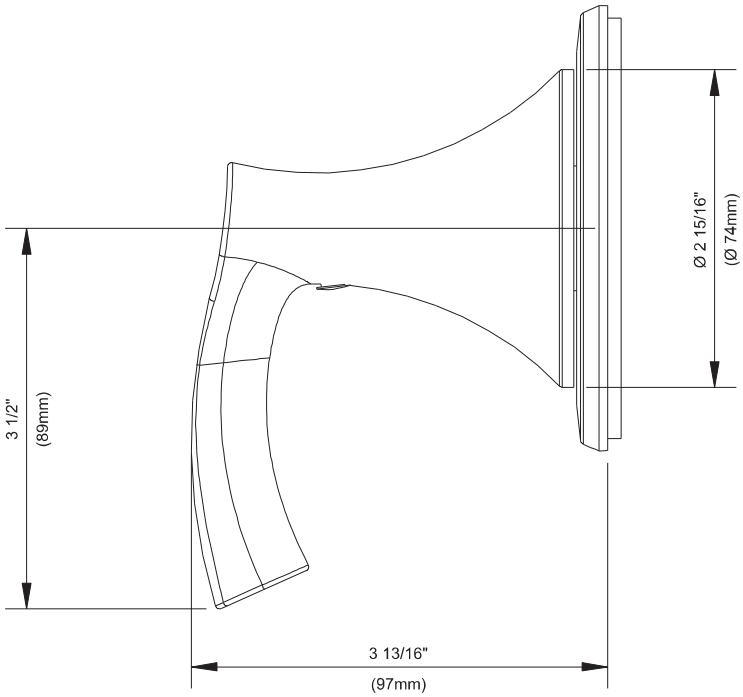

Submittal Information:

Name: _____ Contractor: _____

Location: _____ Contact #: _____

SH-2

D130515BT

Single Handle 1/2" 3-Position Diverter Valve

SPECIFICATIONS

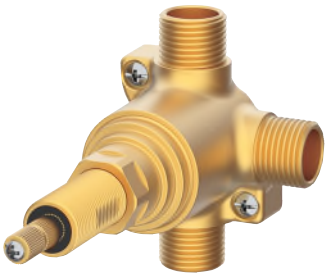

Features/Benefits

- 3-Port Valve Services Up to Two Shower Outlets
- 2 Outlet, 3 Position Diverter Valve (A-Pause-B)
- 1/2" Combination IPS / Copper Sweat Ports
- Use with Gerber Series Trim Kits, Sold Separately

- Discharge Port Usage

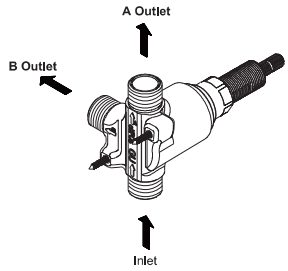

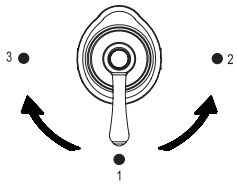

Handle Position	Port Mark
1	Pause
2	B
3	A

Standards & Certifications

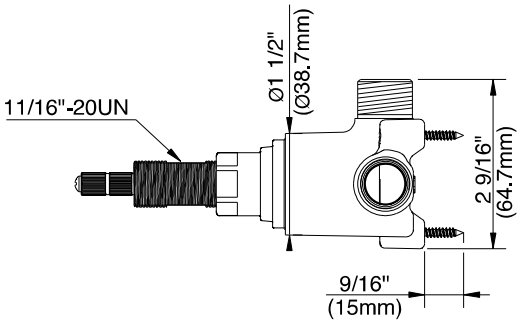

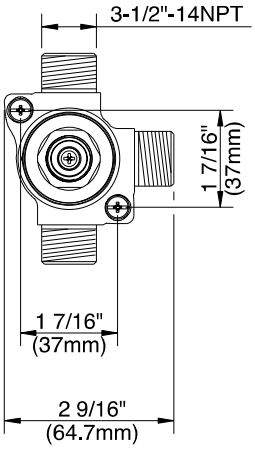

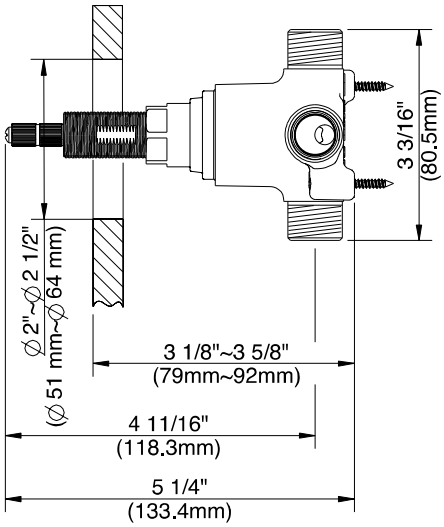

Submittal Information:

Name: _____ Contractor: _____

Location: _____ Contact #: _____

SH-2

GERBER

D469058

Wall Mount Supply Elbow

SPECIFICATIONS

Features/Benefits

- Integral Check Valve
- 1/2” Supply Connection

Available Color/Finishes

Color tiles intended for reference only.

Color	Code	Description
		Chrome
	BN	Brushed Nickel
	BS	Satin Black
	BB	Brushed Bronze

Standards & Certifications

ASME A112.18.1/CSA B125.1

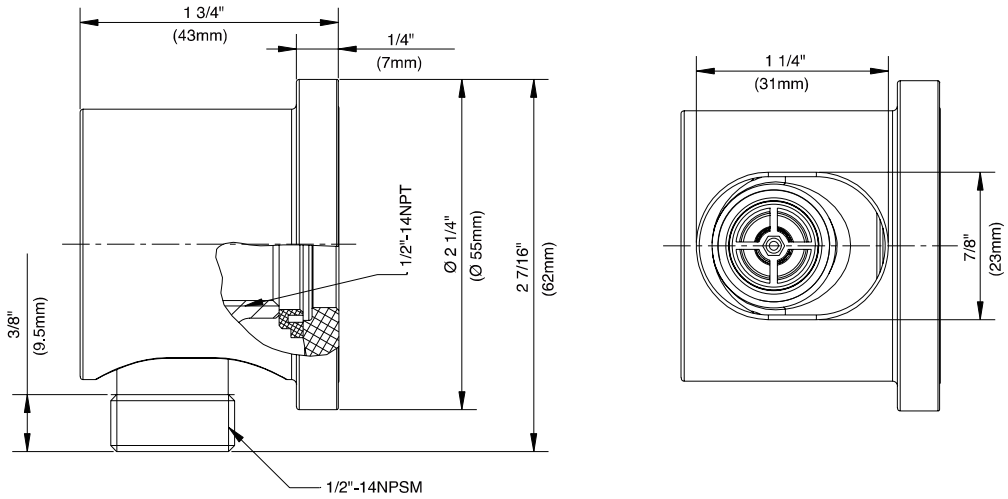

Submittal Information:

Name: _____ Contractor: _____

Location: _____ Contact #: _____

SH-2

G0044775
Commercial
Hand Shower and Grab Bar/ Slide Bar Kit

SPECIFICATIONS

Features/Benefits

- 1.75 gpm (6.6 L/min) Max Flow @ 80 psi
- 2 Function Handshower: Spray and Trickle
- Easy Clean Nozzles
- Integral Check Valve
- Angle and Height Adjustable
- Includes Slide Bar, Handshower and 72" Metal Shower Hose
- Supply Elbow Sold Separately

Available Color/Finishes

Color tiles intended for reference only.

Color	Code Description
	Chrome

Standards & Certifications

ASME A112.18.1/CSA B125.1
ADA
EPA WaterSense®
California Energy Commission (CEC)

Flow Rate

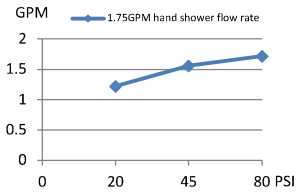

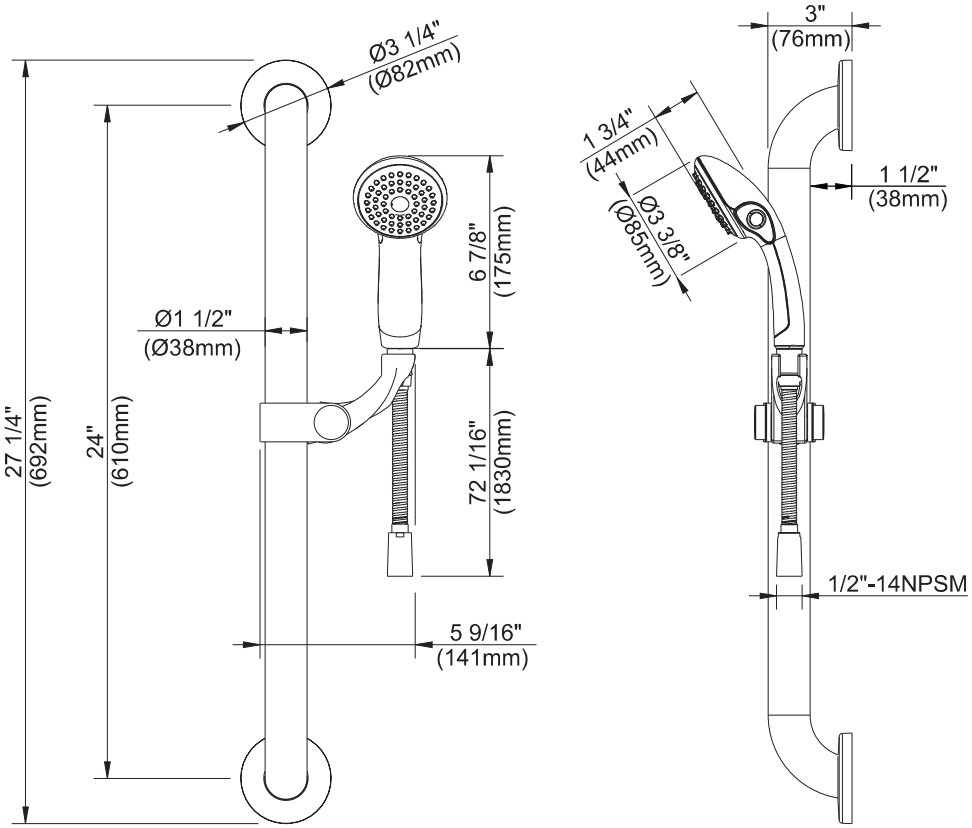

Submittal Information:

Name: _____ Contractor: _____

Location: _____ Contact #: _____