CITY OF KALAMAZOO, MICHIGAN
METERING STATIONS CONTROL UPGRADES

710 AVIS DRIVE
ANN ARBOR, MI 48108
PHONE: (734) 665-6000 FAX: (734) 213-3003
www.tetratech.com
TETRA TECH

ELECTRICAL SHEETS

1. ELECTRICAL LEGEND
2. ELECTRICAL NOTES, DETAILS
3. SYSTEM CONFIGURATION DRAWING
4. SYSTEM CONFIGURATION DRAWING
5. O-AVENUE METERING STATION ONE-LINES, DETAILS
6. O-AVENUE CONTROL PANEL LAYOUT, WIRING DIAGRAM
7. O-AVENUE CONTROL PANEL WIRING DIAGRAM
8. MATTAWAN METERING STATION ONE-LINES, DETAILS
9. MATTAWAN CONTROL PANEL LAYOUT, WIRING DIAGRAM
10. MATTAWAN CONTROL PANEL WIRING DIAGRAM
11. VICKSBURG METERING STATION ONE-LINES, DETAILS
12. VICKSBURG CONTROL PANEL LAYOUT, WIRING DIAGRAM
13. VICKSBURG CONTROL PANEL WIRING DIAGRAM
14. SOUTH COUNTY METERING STATION ONE-LINES, DETAILS
15. SOUTH COUNTY CONTROL PANEL LAYOUT, WIRING DIAGRAM
16. SOUTH COUNTY CONTROL PANEL WIRING DIAGRAM
17. PFIZER METERING STATION ONE-LINES, DETAILS
18. PFIZER CONTROL PANEL LAYOUT, WIRING DIAGRAM
19. PFIZER CONTROL PANEL WIRING DIAGRAM
20. GRAPHICS PACKAGING METERING STATION ONE-LINES, DETAILS
21. GRAPHICS PACKAGING CONTROL PANEL LAYOUT, WIRING DIAGRAM
22. GRAPHICS PACKAGING CONTROL PANEL WIRING DIAGRAM
23. BELLS BREWERY METERING STATION ONE-LINES, DETAILS
24. BELLS BREWERY CONTROL PANEL LAYOUT, WIRING DIAGRAM
25. BELLS BREWERY CONTROL PANEL WIRING DIAGRAM
26. COOPER METERING STATION ONE-LINES, DETAILS
27. COOPER CONTROL PANEL LAYOUT, WIRING DIAGRAM
28. COOPER CONTROL PANEL WIRING DIAGRAM
29. PARCHMENT METERING STATION ONE-LINES, DETAILS
30. PARCHMENT CONTROL PANEL LAYOUT, WIRING DIAGRAM
31. PARCHMENT CONTROL PANEL WIRING DIAGRAM
32. ALLNEX METERING STATION ONE-LINES, DETAILS
33. ALLNEX CONTROL PANEL LAYOUT, WIRING DIAGRAM
34. ALLNEX CONTROL PANEL WIRING DIAGRAM
35. PORTAGE CREEK METERING STATION ONE-LINES, DETAILS
36. PORTAGE CREEK CONTROL PANEL LAYOUT, WIRING DIAGRAM
37. PORTAGE CREEK CONTROL PANEL WIRING DIAGRAM
38. MEREDITH METERING STATION ONE-LINES, DETAILS
39. MEREDITH CONTROL PANEL LAYOUT, WIRING DIAGRAM
40. MEREDITH CONTROL PANEL WIRING DIAGRAM

PROJECT LOCATION:

KALAMAZOO, MICHIGAN

CLIENT INFORMATION:

CITY OF KALAMAZOO

Tt PROJECT No.:

200-19743-21003

CLIENT PROJECT No.:

PROJECT DESCRIPTION / NOTES:

ISSUED:

OWNER REVIEW 10-15-21
OWNER REVIEW 11-4-21
OWNER REVIEW 1-14-22
FINAL OWNER REVIEW 2-18-22
QA/QC 4-27-22
FOR BIDDING AND CONSTRUCTION 4-28-22

VICINITY MAP:

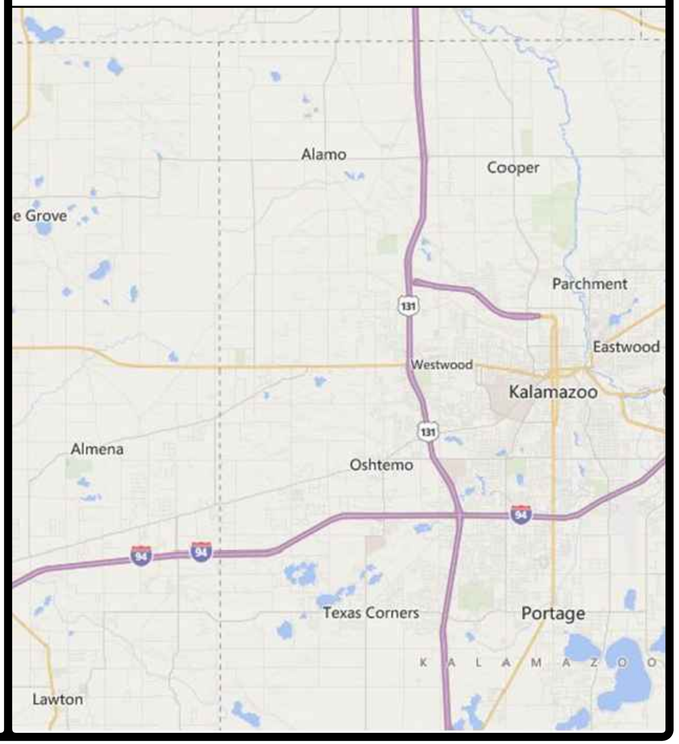

BACKGROUND PLAN AND ONE LINE SYMBOLS

SYMBOL	DESCRIPTION
	CONTROL SWITCH (SEL. OR P.B.) SEE CIRCUITS FOR SPECIFIC TYPE
F FL	SEE CIRCUITS FOR SPECIFIC TYPE FLOAT SWITCH - FLOW SWITCH
T M	TEMPERATURE - HUMIDISTAT SWITCH (SUBSCRIPT=NO. OF STAGES)
L P V	LIMIT (PROXIMITY TYPE) PRESSURE - VACUUM SWITCH
ALT	ELECTRICAL OR MECHANICAL ALTERNATOR (SEE WIRING)
OS	OVERLOAD SWITCH OR DEVICE
TB	TERMINAL BOX
	SOLENOID VALVE
PC	PHOTOCELL LINE VOLTAGE
	AS NOTED (LIGHTING PANEL, CONTROL PANEL, DISTRIBUTION PANEL, ETC.) WALL MOUNTED
JB	JUNCTION BOX
	TRANSFORMER
	CONDUIT WITH CONDUIT SEAL FITTING
	CONDUIT EXPOSED
	CONDUIT CONCEALED
E	DIRECT BURIED CONDUIT
UG	DIRECT BURIED CABLE
OH	OVERHEAD LINE
DB	UNDERGROUND DUCT BANK
EDB	EXISTING UNDERGROUND DUCT BANK
1 2 3 4 5 6	CONCRETE ENCASED DUCT BANK WITH CABLE LOCATIONS, AND SPARE DUCTS AS INDICATED ON DRAWINGS
	CABLE REEL
L L L L	MULTI-STACK ALARM LIGHTS
	SELECTOR SWITCH / PUSHBUTTON. FUNCTIONS AS SHOWN IN WIRING DIAGRAMS
	LOW VOLTAGE DISCONNECT SWITCH
	LOW VOLTAGE FUSE (BELOW 600V)
	HIGH VOLTAGE FUSE (ABOVE 600V)
1 RV, 2 FVR, 3 2S,2W	ALL STARTERS SHALL BE FULL VOLTAGE, NON-REVERSING UNLESS OTHERWISE INDICATED. (FVR) FULL VOLTAGE REVERSING (RV) REDUCED VOLTAGE (2S, 2W) TWO SPEED, TWO WINDING
	600V, 3 POLE MOLDED CASE CIRCUIT BREAKER, FRAME & RATING AS SHOWN
1 2 A-3	SINGLE PHASE, FRACTIONAL HP MOTOR TO LOCATION INDICATED (SEE NOTE 2 ON STANDARD NOTE SHEET)
86	DEVICE SYMBOL WITH TYPE DEVICE
A 1	THREE PHASE LOAD WITH IDENTIFICATION

SYMBOL	DESCRIPTION
FT 10	TAG NO. (BALLOON) FOR DEVICE INDICATED
FT 10, A-3, MCP OR CP-1	FOR POWER (SEE NOTE 2 ON STANDARD NOTE SHEET) 3/4"C(2/C#18SH) CONDUIT AND WIRE RUN FROM DEVICE INDICATED TO LOCATION INDICATED
	CAPACITOR, 3 PHASE, SIZE AS INDICATED
F C	DISCONNECT SWITCH (F) = FUSED, (C) = CIRCUIT BREAKER
	MAGNETIC STARTER (BACKGROUND DRAWINGS ONLY)
SIZE 2	COMBINATION MAGNETIC STARTER FUSED UNLESS NOTED (CIRCUIT BREAKER)
LC	COMBINATION LIGHTING CONTACTOR WITH HAND-OFF-AUTO SWITCH
R	MANUAL STARTER (R) = REVERSING
CP	CONTROL PANEL
1/8 UH-19	UNIT HEATER, 1/8 HORSEPOWER
	LIGHTING ARRESTOR
A-3	LOW VOLTAGE HOME RUNS 120/208V, 120/240V (SEE NOTE 2 ON STANDARD NOTE SHEET)
NEMA 4	WATERTIGHT
NEMA 4X	WATERTIGHT AND CORROSION PROOF
NEMA 7	EXPLOSION PROOF - CLASS I, DIVISION 1, GROUP D
NEMA 9	EXPLOSION PROOF - CLASS II, DIVISION 1
K	KEYLOCK
SD	SMOKE DETECTOR
E	EXIT LIGHT
	FLUORESCENT LUMINAIRE
	INCANDESCENT LUMINAIRE
	HIGH INTENSITY DISCHARGE LIGHT
EM	EMERGENCY BATTERY PACK
DS	DESK INTERCOM SET
	CAMERA
PTZ	DOME CAMERA (PAN, TILT, ZOOM)
52	DRAW OUT CIRCUIT BREAKER (ABOVE 600 VOLT)
	CIRCUIT BREAKER WITH STAB CONNECTION
(3) 50/5	CURRENT TRANSFORMER, AND RATIO (WITH NUMBER REQUIRED SHOWN)

WIRING DEVICE SCHEDULE

SYMBOL	DESCRIPTION	NEMA TYPE
	125V, 2P, DUPLEX, 3W	5-20 R
	SIMPLEX RECEPTACLE	
	QUAD RECEPTACLE	
	20A, 120/277V SWITCH	SPST

CONTROL CIRCUIT & PILOT DEVICE LEGEND

SYMBOL	DESCRIPTION
	PRESSURE ACTUATED SWITCH
	FLOW ACTUATED SWITCH
	LIMIT SWITCH - NORMALLY OPEN
	LIMIT SWITCH - NORMALLY CLOSED - HELD OPEN
	LATCHING CABLE SWITCH
	MOMENTARY PUSHBUTTON OPERATOR-NORMALLY CLOSED
	MOMENTARY PUSHBUTTON OPERATOR-NORMALLY OPEN
	CONTROL RELAY CONTACT - NORMALLY OPEN
INST.	TIMING RELAY INSTANTANEOUS CONTACT
CR	CONTROL RELAY COIL
CR L, CR U	TWO COIL LATCHING RELAY
	TIMED CLOSED CONTACT ON ENERGIZATION
	TIMED OPEN CONTACT ON DE-ENERGIZATION
	ZERO SPEED OR ANTI-PLUGGING SWITCH
	MAINTAINED STOP-START PUSHBUTTON OPERATOR
	MAINTAINED PUSH - PULL OPERATOR
	LOCAL TERMINALS WITH EXTERNAL WIRING
T	TIMING RELAY COIL
T 1	TIMING RELAY COIL (OFF DELAY)
G	INDICATING LIGHT
	PUSH-TO-TEST INDICATING LIGHT
X1 X2	SECONDARY TRANSFORMER
	MOLDED CASE CIRCUIT BREAKER
	GENERAL DISCONNECT SWITCH

SYMBOL	DESCRIPTION
	SELECTOR SWITCH - NORMALLY OPEN
	FLOAT ACTUATED SWITCH
	TEMP. ACTUATED SWITCH
	LIMIT SWITCH - NORMALLY CLOSED
	LIMIT SWITCH - NORMALLY OPEN - HELD CLOSED
	TIME DELAY FUSE
	PUSHBUTTON OPERATOR WITH MUSHROOM HEAD
(F)	FIELD LOCATED STOP BUTTON
	CONTROL RELAY CONTACT - NORMALLY CLOSED
INST.	TIMING RELAY INSTANTANEOUS CONTACT
O H C	SELECTOR SWITCH OPERATOR WITH FUNCTION SHOWN
	TIMED OPEN CONTACT ON ENERGIZATION
	TIMED CLOSED CONTACT ON DE-ENERGIZATION
R 1	PUSH-TO-TEST INDICATING LIGHT
	MAINTAINED STOP - MOMENTARY START PUSHBUTTON (JOG)
	SOLENOID OR CLUTCH
ETI	ELAPSED TIME INDICATOR
X1 X2	120VAC TRANSFORMER
	PUSHBUTTON OPERATOR WITH MUSHROOM HEAD
	THERMAL OVERLOAD
(F)	FIELD LOCATED
	TERMINAL POINT
	TERMINAL
	LOW VOLTAGE FUSE
	FUSIBLE TERMINAL BLOCK
	CONTROL POWER TRANSFORMER
	RECEPTACLE

NOTE: THE PLC I/O ADDRESS SHALL BE USED AS THE WIRING TAG SCHEME FOR ALL PANEL AND FIELD CONTROL WIRING. COORDINATE WITH ELECTRICAL CONTRACTOR.

I.S.A. STANDARD LETTER FUNCTIONS

SYMBOL	FIRST LETTER	SUCCEEDING LETTERS
A	ANALYSIS, ANALOG	ALARM
B	BURNER, FLAME	BATCH
C	CONDUCTIVITY, COMMAND	CONTROL (FEEDBACK TYPE)
D	DENSITY, SPECIFIC GRAVITY	
E	VOLTAGE	PRIMARY ELEMENT
F	FLOW RATE	RATIO
G	GAGING	GLASS
H	HAND, MANUAL	HIGH
I	CURRENT	INDICATE
J	POWER	SCAN
K	TIME, TIME SCHEDULE	CONTROL (NO FEEDBACK)
L	LEVEL, LIGHT	LOW
M	MOISTURE, HUMIDITY	MIDDLE, MODULATE
N		
O	OVERLOAD	ORIFICE
P	PRESSURE, VACUUM	POINT
Q	QUANTITY	TOTALIZE, INTEGRATE
R	RADIOACTIVITY	RECORD, PRINT, RECEIVE
S	SPEED, FREQUENCY, SOLENOID	SWITCH
T	TEMPERATURE, TURBIDITY	TRANSMIT, TRANSFORM
U	MULTIVARIABLE	MULTIFUNCTION
V	VIBRATION, VISCOSITY	VALVE, DAMPER, LOUVER
W	WEIGHT, FORCE	
X		
Y		RELAY, COMPUTE
Z	POSITION	DRIVE, ACTUATE

PROTECTIVE RELAY LEGEND

DEVICE NO.	DESCRIPTION
2	SYNC. TIMER 0-5 MIN.
25	SYNCHRONIZING
27	SHORT TIME UNDERVOLTAGE
32	REVERSE POWER RELAY
38	TEMPERATURE
40	LOSS OF EXCITATION
43	SELECTOR SWITCH
47	PHASE SEQUENCE & UNDERVOLTAGE
49	THERMAL
50/51	INSTANTANEOUS AND VERY INVERSE
51	VERY INVERSE
51G	INVERSE GROUND FAULT
51N	NEUTRAL OVERCURRENT
51V	OVERCURRENT RELAY WITH VOLTAGE RESTRAINT
52/CS	CONTROL SWITCH
59	INSTANTANEOUS OVERVOLTAGE
60	VOLTAGE BALANCE
62	TIME DELAY
64	SHORT TIME LOW PICK UP OVERVOLTAGE
67	DIRECTIONAL OVERCURRENT
69	LOCKOUT CONTROL SWITCH
78	OUT OF STEP
81	OVER/UNDER FREQUENCY RELAY
83	MULTI-CONTACT AUXILIARY
86/HR	MULTI-CONTACT AUX. HAND RESET
87	DIFFERENTIAL OVERCURRENT

SYMBOL LEGEND

SYMBOL	DESCRIPTION	SYMBOL	DESCRIPTION
PT	POTENTIAL TRANSFORMER	W	WATTMETER
CT	CURRENT TRANSFORMER	AP	ALARM POINT
A	AMMETER	CPT	CONTROL POWER TRANSFORMER
V	VOLTMETER	(2) (3)	NUMBER OF DEVICES REQUIRED
PF	POWER FACTOR METER	ETI	ELAPSED TIME METER

TETRA TECH
www.tetratech.com
710 AVIS DRIVE
ANN ARBOR, MI 48108
PHONE: (734) 665-6000 FAX: (734) 213-3003

MARK	DATE	DESCRIPTION	BY

CITY OF KALAMAZOO, MICHIGAN
METERING STATIONS CONTROL UPGRADES

ELECTRICAL LEGEND

Project No.:	200-19743-21003
Designed By:	GCJ
Drawn By:	JLS
Checked By:	MSJ/GCJ

Copyright: Tetra Tech

Bar Measures 1 inch

2/21/2022 3:09:59 PM - \\TT LOCAL\IER\PROJECTS\ANN ARBOR\IER\19743\200-19743-21003\CAD\SHEETFILES\METERING\1_E-LEG.DWG - SHANK, JASON

NOTES:

1. FIELD VERIFY CONDUIT ROUTING AT THE METERING SITES WITH OWNER. CORE HOLES AS REQUIRED TO SUIT INSTALLATION OF THE CONDUITS SHOWN. PATCH WITH NON-SHRINK GROUT.
2. TURN OVER TO OWNER AT PROJECT COMPLETION OPERATION AND MAINTENANCE MANUALS (QUANTITY AS SPECIFIED) TO OWNER.
3. IN ADDITION TO PATCH CABLES SUPPLIED FOR THE PROJECT, FURNISH 30-10FT LONG MULTIMODE DUPLEX FIBER OPTIC PATCH CABLES (LC-LC) CONNECTORS, AND 30-10FT CAT-6 PURPLE PATCH CABLES FOR OWNERS USE. TURN OVER CABLES TO OWNER.
4. MULTIMODE FIBER OPTIC PATCH CABLES, AND ETHERNET PATCH CABLES SUPPLIED IN THE PROJECT SHALL BE COLORED PURPLE.
5. FIBER OPTIC PATCH PANELS SHALL BE THE PRODUCT OF CORNING CABLE SYSTEMS. (RACK OR SURFACE MOUNTED AS SHOWN", LC STYLE CONNECTORS, WITH QUANTITY OF BULKHEADS AS SHOWN.

GENERAL CONSTRUCTION NOTES:

1. ELECTRICAL MATERIALS AND EQUIPMENT ITEMS SHOWN IN LIGHT LINE WEIGHTS ON THE DRAWINGS ARE EXISTING ITEMS TO REMAIN. ELECTRICAL MATERIALS AND EQUIPMENT ITEMS SHOWN IN HEAVY LINE WEIGHTS ARE NEW THIS CONTRACT.
2. ITEMS SHOWN OR NOTED TO BE DEMOLISHED ON THE DRAWINGS ARE EXISTING ITEMS TO BE REMOVED FROM SITE BY CONTRACTOR UNLESS NOTED TO BE TURNED OVER TO OWNER.
3. FOR ITEMS INDICATED AS "FIELD LOCATE", THE CONTRACTOR SHALL FIELD VERIFY FOR INTERFERENCE AND FOR LOCATIONS OF MOUNTING FLANGES, CONNECTION POINTS, ETC.
4. CONDUIT ROUTINGS SHOWN ON BACKGROUND PLANS ARE INTENDED ROUTINGS ONLY. EXACT CONDUIT ROUTINGS FOR CONDUITS, AND LENGTH SHALL BE FIELD LOCATED AND VERIFIED BY THE CONTRACTOR. COORDINATE CONDUIT ROUTING IN FINISHED AREAS WITH OWNER. CONDUIT TO BE CONCEALED IN THESE AREAS.
5. REFER TO THE CABLE MANUFACTURER'S RECOMMENDATIONS FOR MINIMUM BEND RADIUS FOR FIBER OPTIC CABLES. INSTALL NEW PULL BOXES (PB) AS REQUIRED FOR CONDUITS. SIZE PULL BOXES AS REQUIRED PER FIBER OPTIC CABLE MANUFACTURERS RECOMMENDATIONS.
6. PANELS SHALL BE MOUNTED OFF WALLS WITH STRUT, CONDUITS SHALL BE MOUNTED ON STRUT INCLUDING SINGLE RUNS.
7. CONDUIT ENTERING CONTROL PANELS AND ELECTRICAL EQUIPMENT ENCLOSURES SHALL BE FILLED WITH DUCT SEAL, INCLUDING OPENINGS IN BOTTOM OF PANELS, AND EQUIPMENT.
8. REPAIR SIDEWALKS AND ROADWAYS DUE TO SITE WORK ADDITIONS, THE EXTENT OF THE REPAIR REQUIRED SHALL BE FIELD VERIFIED PRIOR TO BIDS IN CONJUNCTION WITH THE WORK SHOWN IN THE CONTRACT DOCUMENTS. PRIOR TO TRENCHING, FIELD LOCATE EXISTING GAS LINES, TELEPHONE LINES, SPRINKLER LINES, ETC. COORDINATE WITH OWNER
9. PULL CORDS SHALL BE INSTALLED IN CONDUITS CONTAINING NETWORK CABLES, AND FIBER OPTIC CABLES.
10. CORE HOLES AS REQUIRED TO SUIT INSTALLATION OF CONDUIT AND WIRING/CABLING AS SHOWN. FIELD VERIFY EXACT EXTENT OF WORK REQUIRED.
11. FURNISH PULL BOXES FOR FIBER OPTIC CABLE. COORDINATE EXACT BENDING RADIUS WITH MANUFACTURER.
12. NEW CONDUITS INSTALLED THIS CONTRACT WITH FIBER OPTIC CABLES SHALL BE LABELED WITH PHENOLIC TAGS (AT BEGINNING TO END) TO INDICATE THE NUMBER OF STRANDS, ORIGINATION AND DESTINATION. TAGS TO BE COLOR CODED ORANGE FOR MULTIMODE.
13. WHERE NEW CONDUITS SHOWN TO BE INSTALLED PASS UNDER ROADWAYS, CONDUITS SHALL BE CONCRETE ENCASED.
14. PRIOR TO EXCAVATION, FIELD LOCATE EXISTING UTILITIES. COORDINATE WITH OWNER.
15. AREAS WHERE CAMERAS ARE SHOWN TO BE INSTALLED SHALL BE CLASSIFIED AS NEMA 4, UNLESS CALLED OUT OTHERWISE.
16. THE ASSOCIATED INSTRUMENTATION DRAWINGS SHOW EXISTING WIRES AND TERMINAL NUMBERS REQUIRED TO PROPERLY INTERFACE WITH NEW EQUIPMENT. THIS INFORMATION WAS COLLECTED FROM AS-BUILT DRAWINGS AND EXTENSIVE FIELD VERIFICATION. THE INFORMATION SHALL BE USED AS A GUIDE IN RE-TERMINATION. IT SHALL REMAIN THE CONTRACTOR'S RESPONSIBILITY TO EXAMINE THE WIRING AND TO REVISE TO SUIT AS REQUIRED. CHANGES IN THE CONTRACT OR COST WILL NOT BE GRANTED FOR THIS COORDINATION. IT IS THE CONTRACTOR'S RESPONSIBILITY TO EXAMINE PROPOSED WORK SHOWN.
17. CONDUIT ROUTINGS SHOWN ON BACKGROUND PLANS ARE PROPOSED ROUTINGS ONLY. EXACT CONDUIT ROUTINGS AND LENGTH SHALL BE FIELD LOCATED AND VERIFIED BY THE CONTRACTOR. COORDINATE CONDUIT ROUTING IN FINISHED AREAS WITH OWNER. CONDUIT TO BE CONCEALED IN THESE AREAS.
18. CONDUIT/RACEWAYS, PULL BOXES, TERMINAL BOXES, AND JUNCTION BOXES TO BE INSTALLED WITH 316 STAINLESS STEEL FASTENERS SUPPORTS, AND THREADED ROD, ETC. (CHANNEL STRUT TO ALSO BE STAINLESS STEEL). MINIMUM STRUT LENGTH TO BE 12 INCHES, WHERE POSSIBLE. TYPICAL FOR NEMA 12, 4, AND 7 AREAS.
19. WIRING FOR STARTERS SHALL BE IN ACCORDANCE WITH NEMA CLASS II B STANDARDS. SUBMIT ENGINEERED SHOP DRAWINGS FOR ALL STARTERS SHOWN TO BE WIRED.
20. WIRE NUMBERS (1, 3, 5, ETC.) SHALL BE PREFIXED WITH STARTER TAG NUMBERS. THE WIRE NUMBER AFTER THE PREFIX SHALL BE THE MANUFACTURER'S WIRE NUMBERING SYSTEM. WIRE MARKERS SHALL BE USED AT EACH WIRE TERMINATION POINT.
21. IN AREAS WHERE EQUIPMENT AND CONDUIT IS REMOVED, REPAIR WALL AND FLOOR SURFACES AS REQUIRED TO MATCH SURROUNDING AREA. WHERE DEVICES ARE REMOVED FROM CONCEALED BOXES, FURNISH AND INSTALL A BLANK COVER ON THE BOX.
22. FIBER OPTIC CABLE SHALL BE AS CALLED OUT ON SYSTEM CONFIGURATION DRAWINGS, MULTIMODE, ALL DIELECTRIC, SUITABLE FOR INSTALLATION UNDERGROUND IN WET CONDUIT.
23. LEGEND PLATES/EQUIPMENT NAMETAGS TO BE MATTE WHITE BACKGROUND, BLACK LETTERING. THIS IS TYPICAL FOR MOTOR CONTROL CENTERS, CONTROL PANELS, SWITCHGEAR, PANELBOARDS, DISCONNECT SWITCHES, LIGHT SWITCHES, FIELD INSTRUMENTS, LIGHT CONTACTORS, FIELD STARTERS, ETC.
24. FURNISH, AND INSTALL PHENOLIC NAMETAGS ON THE EXTERIOR OF ALL NEW CONDUITS (THIS PROJECT" CONTAINING E-FO, F.O., E-NET, POWER, SIGNAL, AND CABLES. NAMETAGS TO BE INSTALLED ON EACH CONDUIT AT EACH END, BETWEEN ENCLOSURES ORANGE BACKGROUND, WHITE LETTERING, FOR MULTIMODE FIBER, YELLOW BACKGROUND, WHITE LETTERING, SINGLE MODE FIBER, EXAMPLE: "24 - E-FO - TFPP TO FPP-1". FOR POWER: "480V POWER FROM MCC-S TO MCC-B1". FOR CONTROL: "CONTROL WIRES - TO BPP". FOR SIGNAL: "SIGNAL WIRES - TO BPP".

GENERAL NOTES:

1. PRIOR TO SUBMITTING A BID FOR THE WORK DETAILED UNDER THIS CONTRACT, BIDDER SHALL VISIT THE METERING SITES. THE BIDDER SHALL FULLY ACQUAINT ONESELF WITH EXISTING FIELD CONDITIONS AT EACH SITE. NO BULLETINS WILL BE WRITTEN FOR WORK DUE TO LACK OF VERIFICATION OF EXISTING SITE CONDITIONS AND WIRING.
2. NO WIRES SHALL BE TERMINATED TO TERMINAL STRIPS, OR OTHER EQUIPMENT WITHOUT FIRST VERIFYING SIGNAL TYPE. DAMAGES RESULTING FROM LACK OF VERIFICATION SHALL BE BORNE BY THE CONTRACTOR. CONTRACTOR SHALL COORDINATE SIGNAL TYPE AND VOLTAGE WITH I/O CARDS SHOWN.
3. WITHIN CONTROL PANELS, NAMEPLATES SHALL BE PROVIDED TO INDICATE DIFFERENT VOLTAGE LEVELS WITHIN PANELS. ALSO, A NAME TAG (YELLOW BACKGROUND, RED LETTERING) SHALL BE LOCATED ON THE FRONT OF EVERY PANEL INDICATING THAT WHEN MAIN PANEL IS DISCONNECTED 120V IS STILL PRESENT FROM FIELD DEVICES (YELLOW WIRING/ISOLATED INPUT CARDS.)
4. PHENOLIC TAGS ON FACE OF CONTROL PANELS SHALL HAVE WHITE BACKGROUND AND BLACK LETTERING (EXCEPT WARNING TAGS; YELLOW BACKGROUND RED LETTERING).
5. PROVIDE SAFETY COVERS ON 480V MOLDED CASE MAIN CIRCUIT BREAKERS TO INSULATE THE INCOMING CABLES AND SIDE CONDUCTORS FROM CONTACT. (TYP. FOR CONTROL PANELS.) PROVIDE BREAKER LOCKS FOR PUMP CIRCUIT BREAKERS (MCP)AND MAIN PANEL BREAKERS.
6. REFER TO WIRING DIAGRAMS FOR ADDITIONAL INFORMATION ON ISOLATED I/O. A COMMON NEUTRAL MAY BE USED FOR SEVERAL ISOLATED INPUTS FROM THE SAME STARTER. PROVIDE NEUTRAL JUMPERS WIRES WITHIN THE PANEL AS REQUIRED.
7. ELECTRICAL MATERIALS AND EQUIPMENT ITEMS SHOWN IN LIGHT LINE WEIGHTS ON THE DRAWINGS ARE EXISTING ITEMS TO REMAIN. ELECTRICAL MATERIALS AND EQUIPMENT ITEMS SHOWN IN HEAVY LINE WEIGHTS ARE NEW THIS CONTRACT.
8. ITEMS SHOWN CROSSHATCHED (OR NOTED TO BE DEMOLISHED) ON THE DRAWINGS ARE EXISTING ITEMS TO BE REMOVED, FROM SITE BY CONTRACTOR.
9. INSTALL A SINGLE CONDUCTOR INSULATED (RHW, THWN, OR XHHW) COPPER GROUND WIRE IN EACH CONDUIT, SIZE AS SHOWN ON DRAWINGS, OR AS A MINIMUM PER THE NATIONAL ELECTRICAL CODE. THIS GROUND WIRE SHALL BE CONNECTED AT EACH END TO THE EQUIPMENT GROUND. THIS ALSO INCLUDES INSTRUMENTATION DEVICES SUCH AS LEVEL, PRESSURE, FLOW TRANSMITTERS, LIMIT SWITCHES, CONDUITS, NETWORK AND I/O CABLES.
10. THE FOLLOWING EXAMPLE COMPONENT IDENTIFICATION SHALL BE USED AS APPROPRIATE:

(F) FIELD MOUNTED, NOT AT STARTER OR OTHER CONTROL PANELS
(S) STARTER PANEL MOUNTED
(MCP)AT MAIN CONTROL PANEL
(1) AT CONTROL PANEL NO.1
(2) AT CONTROL PANEL NO.2
(TCP) AT TEMPERATURE CONTROL PANEL

11. REFER TO DETAIL SHEETS. CONTRACTOR SHALL FURNISH AND INSTALL HARDWARE AND APPURTENANCES (I.E. PIPE TAPS, WETWELL BUBBLER TUBES, VALVES, COPPER TUBING, BALL VALVES, PNEUMATIC PIPING, SPOOL PIECES, ETC.) FOR FIELD DEVICES SHOWN (FLOWMETERS, PRESSURE TRANSMITTERS, LEVEL TRANSMITTERS, ETC.). WORK SHALL BE COORDINATED WITH OTHER TRADES (MECHANICAL INSTRUMENTATION, ETC.) CONTRACTOR SHALL BE RESPONSIBLE FOR SYSTEM COORDINATION AND INSTALLATION.
12. ETHERNET AND FIBER OPTIC TERMINATIONS SHALL BE PERFORMED BY A QUALIFIED REPRESENTATIVE OF CABLE MANUFACTURER, THE CABLES SHALL BE TESTED. NO SPLICING SHALL BE PERMITTED OF FIBER OPTIC CABLES, BETWEEN PANELS. FIBERS SHALL BE TERMINATED AT PATCH PANELS, INCLUDING SPARES.
13. REFER TO THE CABLE MANUFACTURER'S RECOMMENDATIONS FOR MINIMUM BEND RADIUS FOR FIBER OPTIC CABLES. INSTALL NEW PULL BOXES (PB) AS REQUIRED FOR CONDUITS. SIZE PULLBOXES AS REQUIRED PER FIBER OPTIC CABLE MANUFACTURERS RECOMMENDATIONS.
14. CABLES (INCLUDING FIBER, ETHERNET, CONTROL WIRE, ETC.) WHERE PASSING THROUGH A PULLBOX SHALL BE LABELED AND COMPLETELY IDENTIFIED WITH IDENTIFICATION NUMBERS AND ORIGINATION/DESTINATION. THIS ALSO INCLUDES ALL CABLE BUNDLES ENTERING CONTROL PANELS, PULLBOXES, ETC.
15. CONTROL WIRES SHALL BE TAGGED WITH THE PLC I/O ADDRESS, AND A DESCRIPTION ADDRESS IN THE FIELD AND AT THE PANEL. REFER TO INSTRUMENTATION DRAWINGS, CONTROL PANEL WIRING DIAGRAMS. (TYP.)
16. THE FIELD DEVICES SHOWN ON THE P&ID'S, ELECTRICAL BACKGROUNDS, AND DETAILS SHEETS MAKEUP THE FIELD DEVICE EQUIPMENT REQUIREMENTS. NOT ALL FIELD DEVICES REQUIRED ARE SHOWN ON THE P&ID'S.
17. UPS SELECTED SHALL BE COMPATIBLE WITH ISOLATION TRANSFORMERS. (TYP.)
18. REFER TO I/O DRAWING LAYOUT FOR ADDITIONAL SIGNALS NOT SHOWN ON P&ID FLOW DIAGRAMS.
19. TURN OVER TO OWNER EXISTING PLC, AND RADIO EQUIPMENT DEMOLISHED IN THIS CONTRACT.

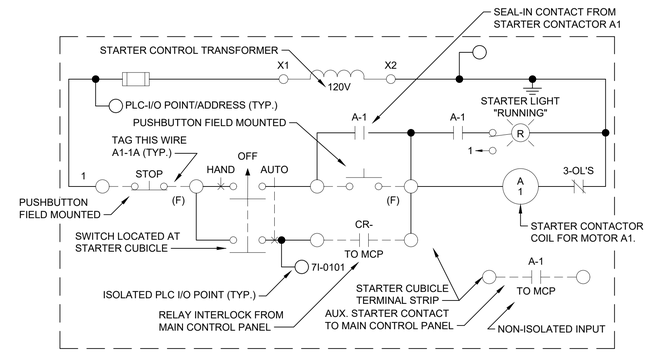

A 1 EXAMPLE PUMP
(TAG A1)
(EXAMPLE CIRCUIT)
STARTER NAMEPLATE

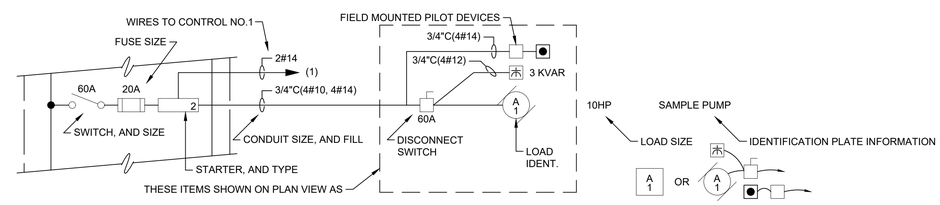

MCC SAMPLE LEGEND EXAMPLE

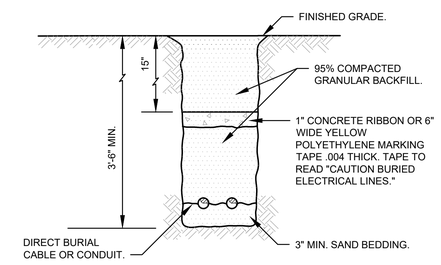

TRENCHING DETAIL

NO SCALE

COOPER METERING STATION	5354 NORTH 20TH STREET, COOPER, MI.
ALNEX METERING STATION	2715 MILLER ROAD, KALAMAZOO, MI.
BELL'S BREWERY METERING STATION	8938 KRUM AVENUE, GALESBURG, MI.
GRAPHICS PACKAGING METERING STATION	1361 NORTH HARRISON STREET, KALAMAZOO, MI.
MATTAWAN METERING STATION	25TH STREET NORTH OF ESTATES COURT, MATTAWAN, MI.
MEREDITH METERING STATION	3601 E. KILGORE ROAD, KALAMAZOO, MI.
O - AVENUE METERING STATION	O AVE. EAST OF SPRINKLE ROAD, KALAMAZOO, MI.
PARCHMENT METERING STATION	511 E. MOSEL, KALAMAZOO, MI.
PFIZER METERING STATION	3501 ROMANCE ROAD, KALAMAZOO, MI.
PORTAGE CREEK METERING STATION	290 E. KILGORE ROAD, KALAMAZOO, MI.
SOUTH COUNTY METERING STATION	5408 TU AVENUE, KALAMAZOO, MI.
VICKSBURG METERING STATION	1321 SPRUCE STREET, VICKSBURG, MI.

METERING STATION ADDRESSES

TETRA TECH
www.tetratech.com
710 AVIS DRIVE
ANN ARBOR, MI 48108
PHONE: (734) 665-6000 FAX: (734) 213-3003

MARK	DATE	DESCRIPTION	BY

CITY OF KALAMAZOO, MICHIGAN
METERING STATIONS CONTROL UPGRADES

ELECTRICAL NOTES, DETAILS

Project No.:	200-19743-21003
Designed By:	GCJ
Drawn By:	JLS
Checked By:	MSJ/GCJ

Copyright: Tetra Tech

Bar Measures 1 inch

4/27/2022 12:22:12 PM - \\TT.LOCAL\ER\PROJECTS\ANN ARBOR\ER\19743\200-19743-21003\CAD\SHEETFILES\METERING\2_E-NOTES.DWG - SHANK, JASON

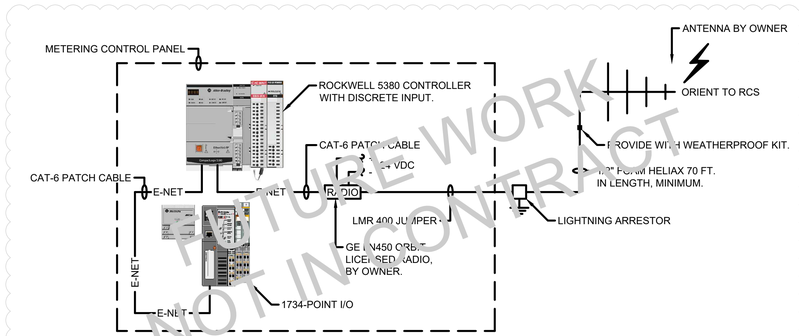

O-AVENUE

NOTE: PLC/RADIO PROGRAMMING BY OWNER/TETRATECH.

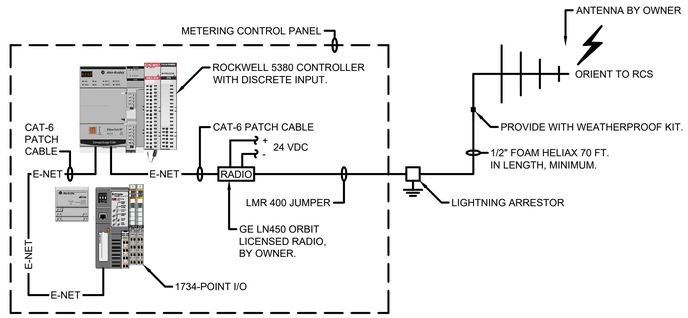

SOUTH COUNTY

NOTE: PLC/RADIO PROGRAMMING BY OWNER/TETRATECH.

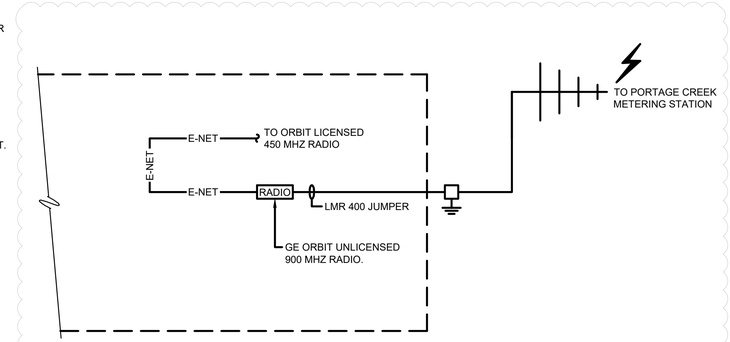

WATER STATION NO.8

WORK SHOWN BY OWNER.

THIS WORK NOT IN CONTRACT. BY OWNER.

FUTURE WORK NOT IN CONTRACT

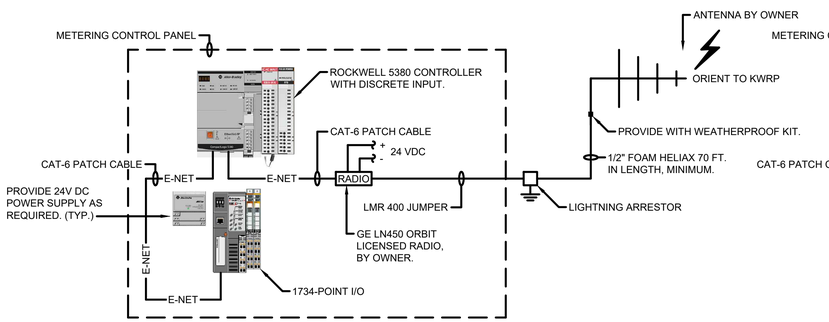

COOPER

NOTE: PLC/RADIO PROGRAMMING BY OWNER/TETRATECH.

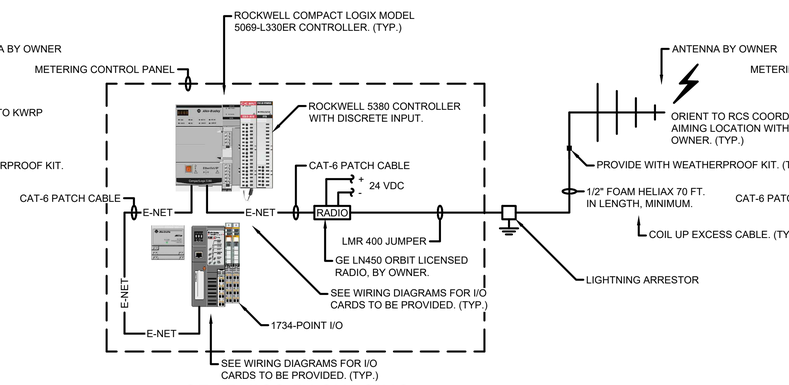

GRAPHICS PACKAGING

NOTE: PLC/RADIO PROGRAMMING BY OWNER/TETRATECH.

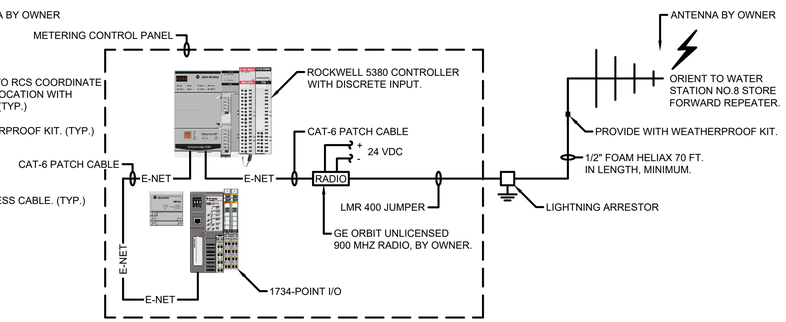

PORTAGE CREEK

NOTE: PLC/RADIO PROGRAMMING BY OWNER/TETRATECH.

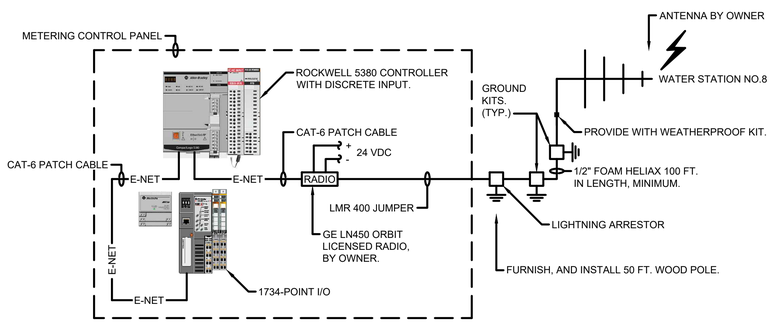

PFIZER

NOTE: PLC/RADIO PROGRAMMING BY OWNER/TETRATECH.

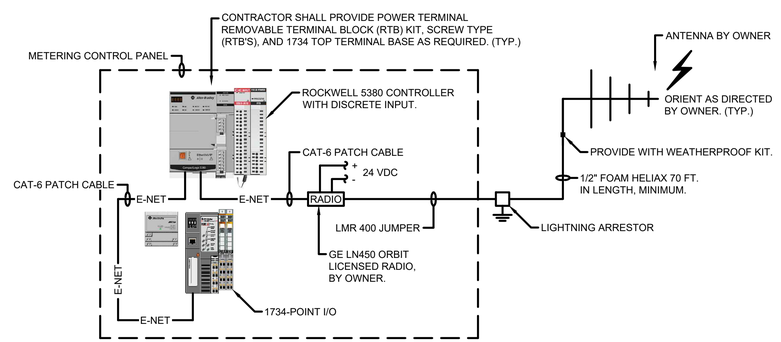

MATTAWAN

NOTE: PLC/RADIO PROGRAMMING BY OWNER/TETRATECH.

TETRA TECH
www.tetratech.com
710 AVIS DRIVE
ANN ARBOR, MI 48108
PHONE: (734) 665-6000 FAX: (734) 213-3003

MARK	DATE	DESCRIPTION	BY

CITY OF KALAMAZOO, MICHIGAN
METERING STATIONS CONTROL UPGRADES

SYSTEM CONFIGURATION DRAWING

Project No.:	200-19743-21003
Designed By:	GCJ
Drawn By:	JLS
Checked By:	MSJ/GCJ

3
OF 40

Copyright: Tetra Tech

Bar Measures 1 inch

4/27/2022 12:28:09 PM - \\TT.LOCAL\ER\PROJECTS\ANN ARBOR\ER\19743\200-19743-21003\CAD\SHEETFILES\E\METERING3_SYS CONF.DWG - SHANK, JASON

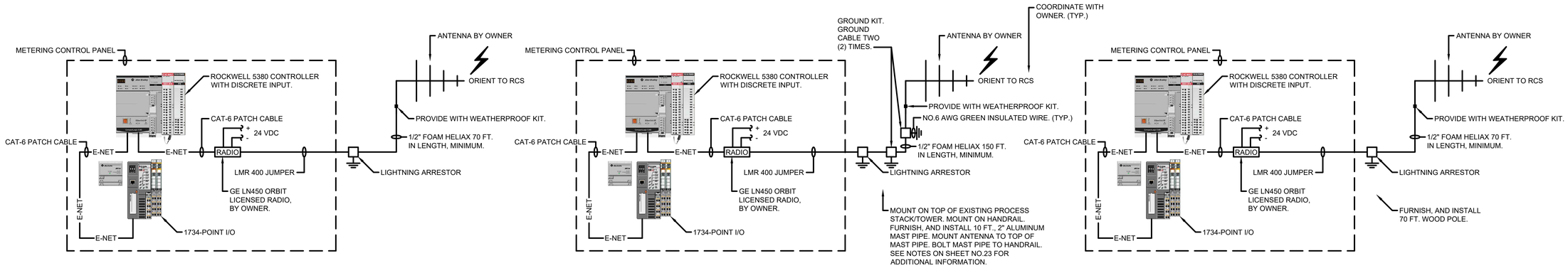

ALLNEX

NOTE: PLC/RADIO PROGRAMMING BY OWNER/TETRATECH.

BELLS BREWERY

NOTE: PLC/RADIO PROGRAMMING BY OWNER/TETRATECH.

VICKSBURG

NOTE: PLC/RADIO PROGRAMMING BY OWNER/TETRATECH.

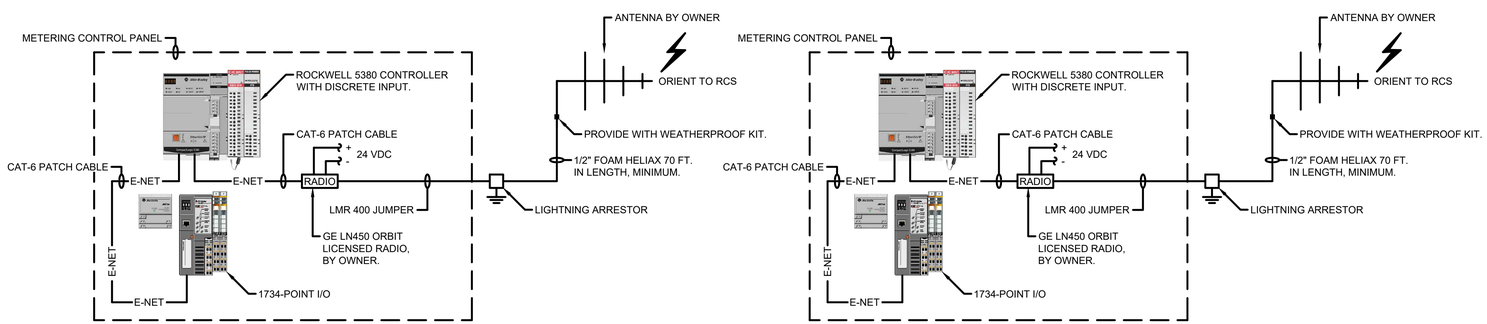

MEREDITH

NOTE: PLC/RADIO PROGRAMMING BY OWNER/TETRATECH.

PARCHMENT

NOTE: PLC/RADIO PROGRAMMING BY OWNER/TETRATECH.

TETRA TECH
www.tetratech.com
710 AVIS DRIVE
ANN ARBOR, MI 48108
PHONE: (734) 665-6000 FAX: (734) 213-3003

MARK	DATE	DESCRIPTION	BY

CITY OF KALAMAZOO, MICHIGAN
METERING STATIONS CONTROL UPGRADES
SYSTEM CONFIGURATION DRAWING

Project No.:	200-19743-21003
Designed By:	GCJ
Drawn By:	JLS
Checked By:	MSJ/GCJ

Copyright: Tetra Tech

Bar Measures 1 inch

2/21/2022 3:10:22 PM - \\TT LOCAL\IER\PROJECTS\ANN ARBOR\IER\19743\200-19743-21003\CAD\SHEETFILES\EMETERING\4_SYS CONF_II.DWG - SHANK, JASON

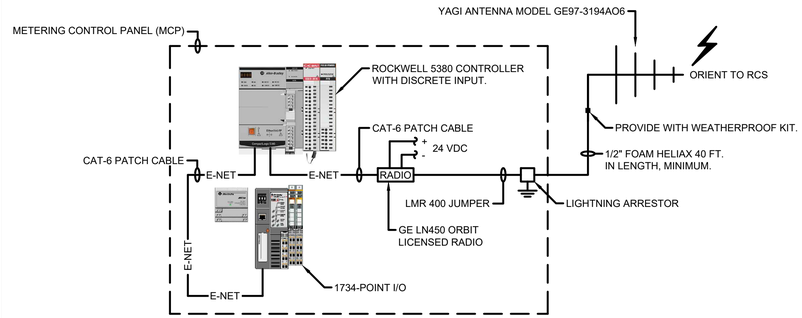

SYSTEM CONFIGURATION DRAWING

NOTE: PLC/RADIO PROGRAMMING BY OWNER/TETRATECH.

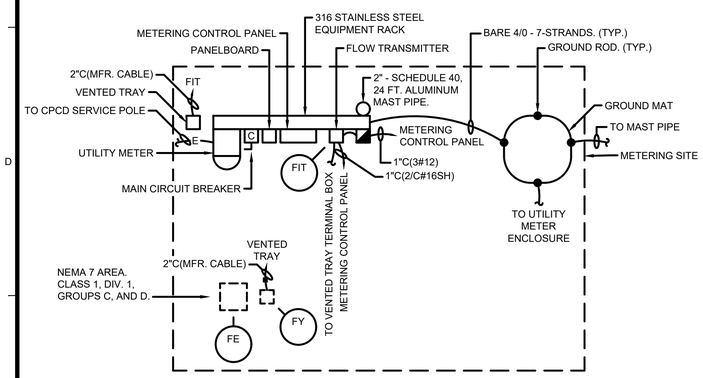

PARTIAL SITE PLAN

NO SCALE

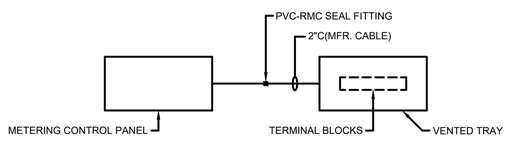

TOP VIEW - VENTED TRAY

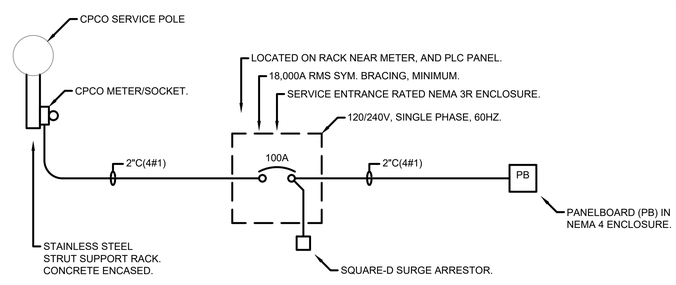

PARTIAL ONE-LINE DIAGRAM - PROPOSED WORK

NO SCALE

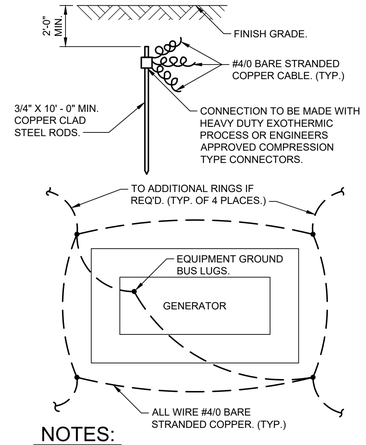

NOTES:

ADDITIONAL CONCENTRIC RINGS SHALL BE ADDED AS REQ'D. TO MEET THE (5) OHM SPECIFIED RESISTANCE. EACH RING TO HAVE 4 GROUND RODS, AND SPACE 10 FEET FROM THE INNER RING.

GROUND MAT

NO SCALE

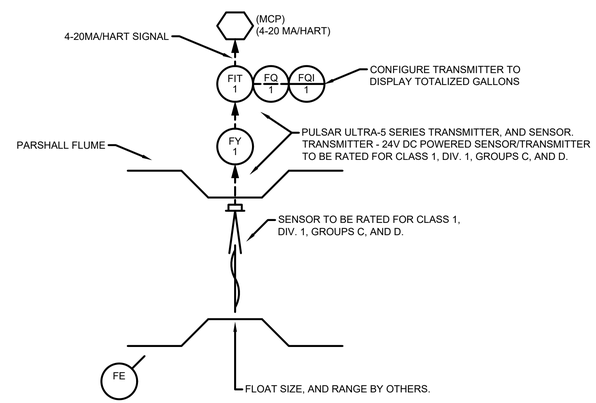

PARTIAL P&ID DIAGRAM

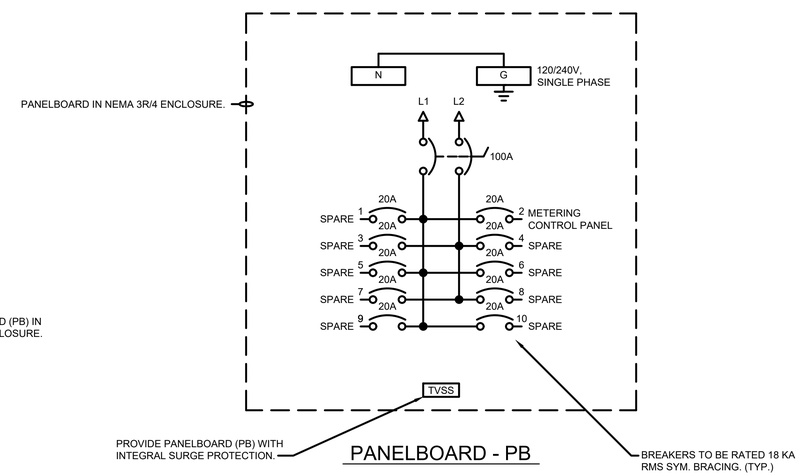

PANELBOARD - PB

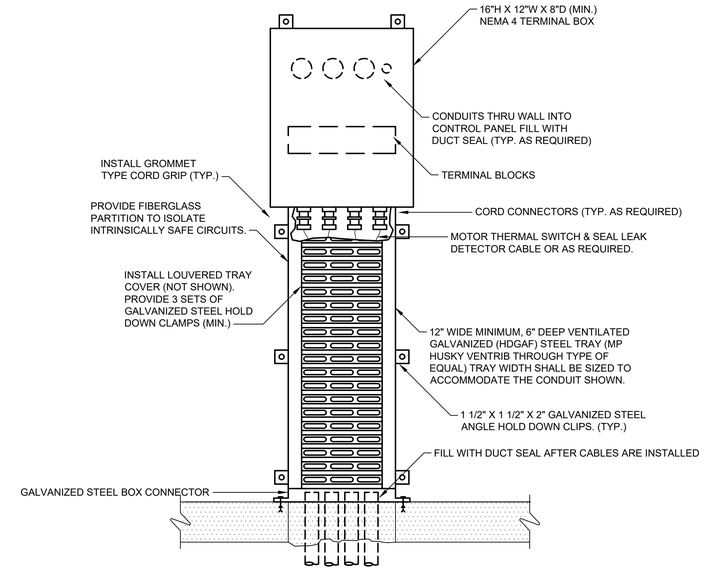

VENTED TRAY DETAIL

PARSHALL FLUME

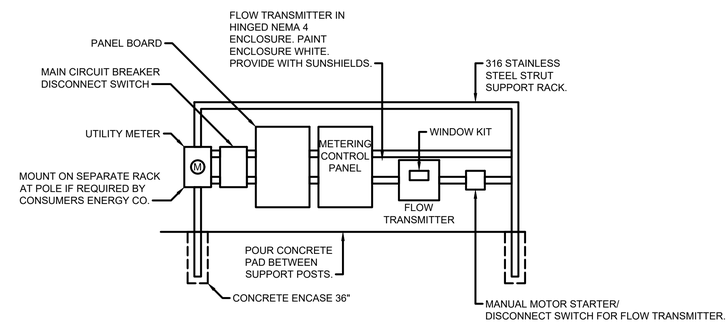

SAMPLE RACK LAYOUT

NO SCALE

FUTURE. WORK NOT IN CONTRACT.

TETRA TECH
www.tetratech.com
710 AVIS DRIVE
ANN ARBOR, MI 48108
PHONE: (734) 665-6000 FAX: (734) 213-3003

MARK	DATE	DESCRIPTION	BY

CITY OF KALAMAZOO, MICHIGAN
METERING STATIONS CONTROL UPGRADES
O-AVENUE METERING STATION ONE-LINES, DETAILS

Project No.:	200-19743-21003
Designed By:	GCJ
Drawn By:	JLS
Checked By:	MSJ/GCJ

Copyright: Tetra Tech

Bar Measures 1 inch

2/21/2022 3:10:29 PM - \\TT-LOCAL\IER\PROJECTS\ANN ARBOR\IER\19743\200-19743-21003\CAD\SHEETFILES\METERING\5_O-AVENUE_ONELINE_DETAILS.DWG - SHANK, JASON

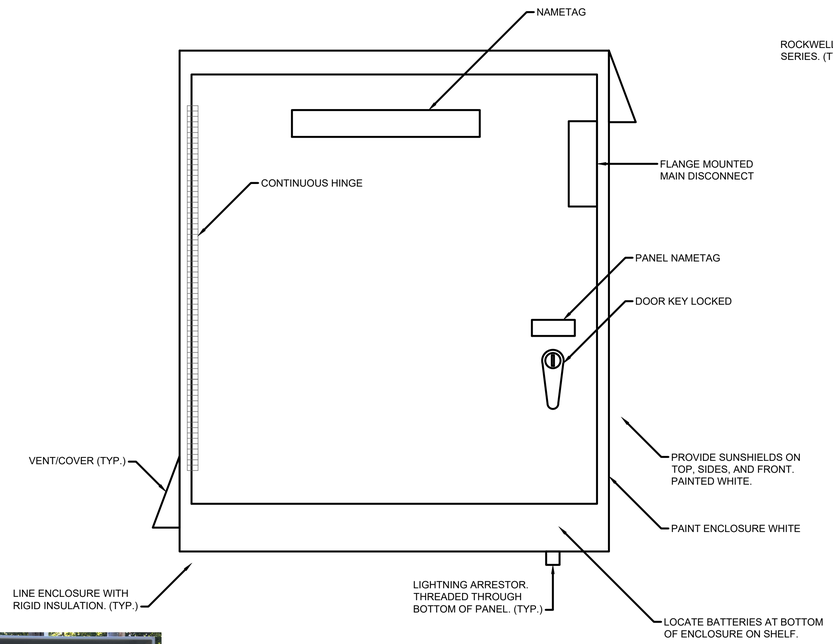

METERING STATION CONTROL PANEL LAYOUT

NEMA 4 ENCLOSURE
SIZE: 42"H X 36"W X12"D (MIN.)
PANEL TO BE CONSTRUCTED BY A UL LISTED PANEL SHOP. (TYP.)

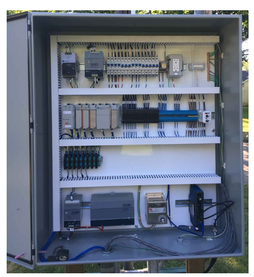

SAMPLE METERING PANEL LAYOUT

NO SCALE

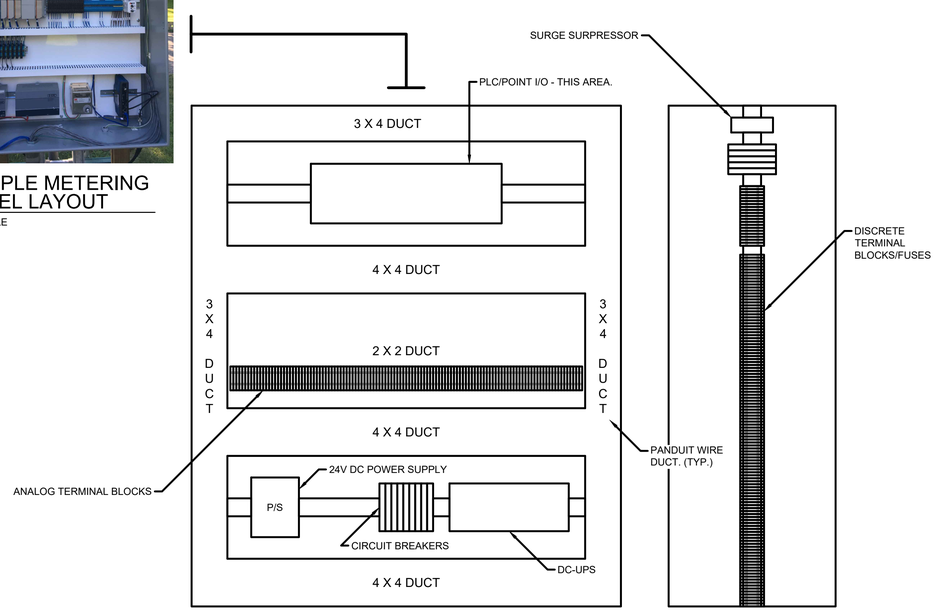

GENERAL SUBPLATE LAYOUT

PAINT INSIDE: GLOSS WHITE.
NOTE: NOT ALL SUBPLATE DEVICES ARE SHOWN.
SEE WIRING DIAGRAMS FOR ADDITIONAL REQUIREMENTS. (TYP.)

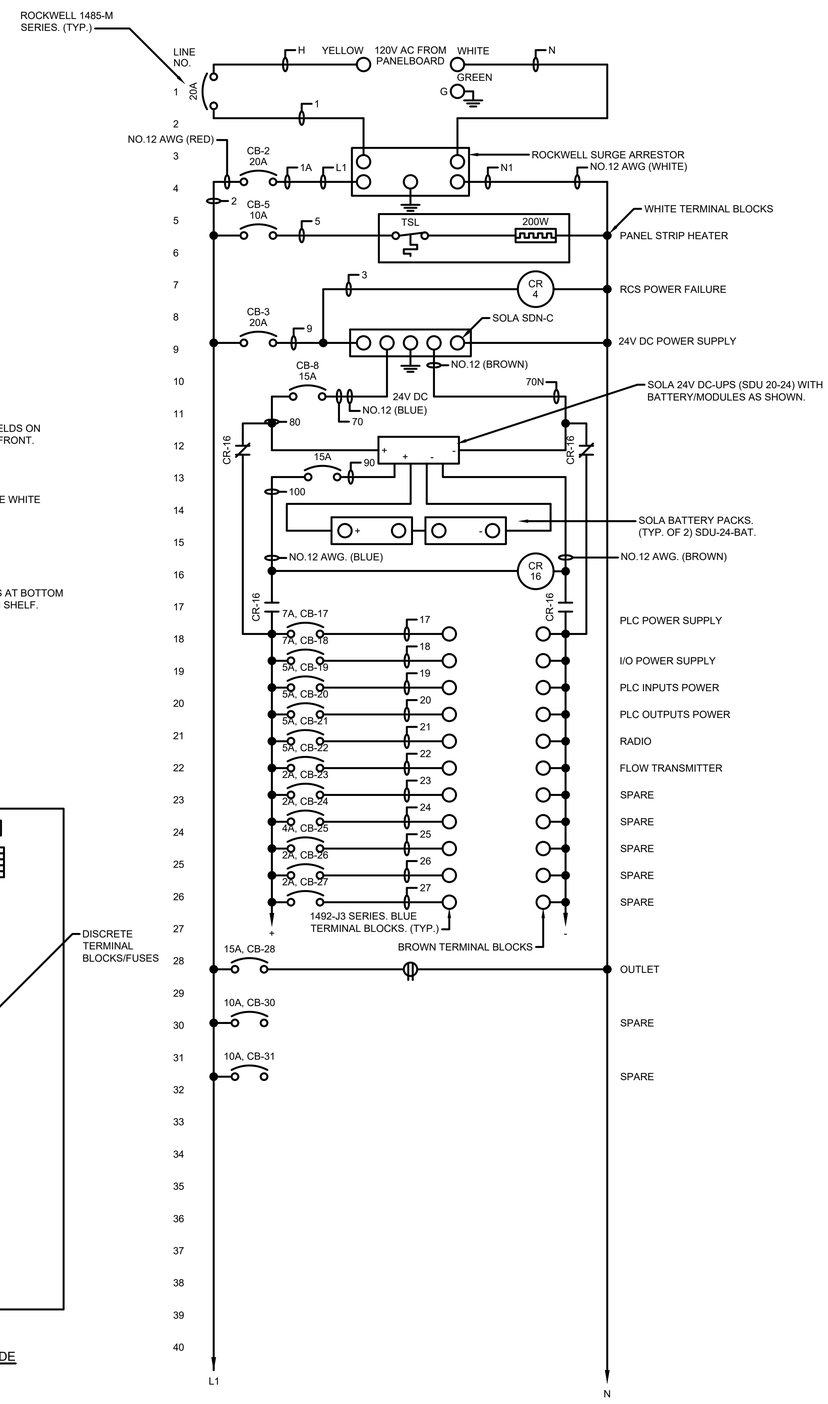

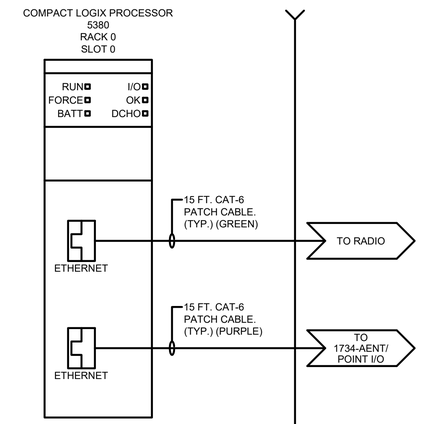

FUTURE. WORK NOT IN CONTRACT.

TETRA TECH
www.tetratech.com
710 AVIS DRIVE
ANN ARBOR, MI 48108
PHONE: (734) 665-6000 FAX: (734) 213-3003

MARK	DATE	DESCRIPTION	BY

CITY OF KALAMAZOO, MICHIGAN
METERING STATIONS CONTROL UPGRADES
O-AVENUE CONTROL PANEL LAYOUT, WIRING DIAGRAM

Project No.:	200-19743-21003
Designed By:	GCJ
Drawn By:	JLS
Checked By:	MSJ/GCJ

Copyright: Tetra Tech

Bar Measures 1 inch

2/21/2022 3:10:36 PM - \\TT LOCAL\IER\PROJECTS\ANN ARBOR\IER\19743\200-19743-21003\CAD\SHEETFILES\E\METERING\6_O-AVENUE_PANEL LAYOUT_WIR DIA.DWG - SHANK, JASON

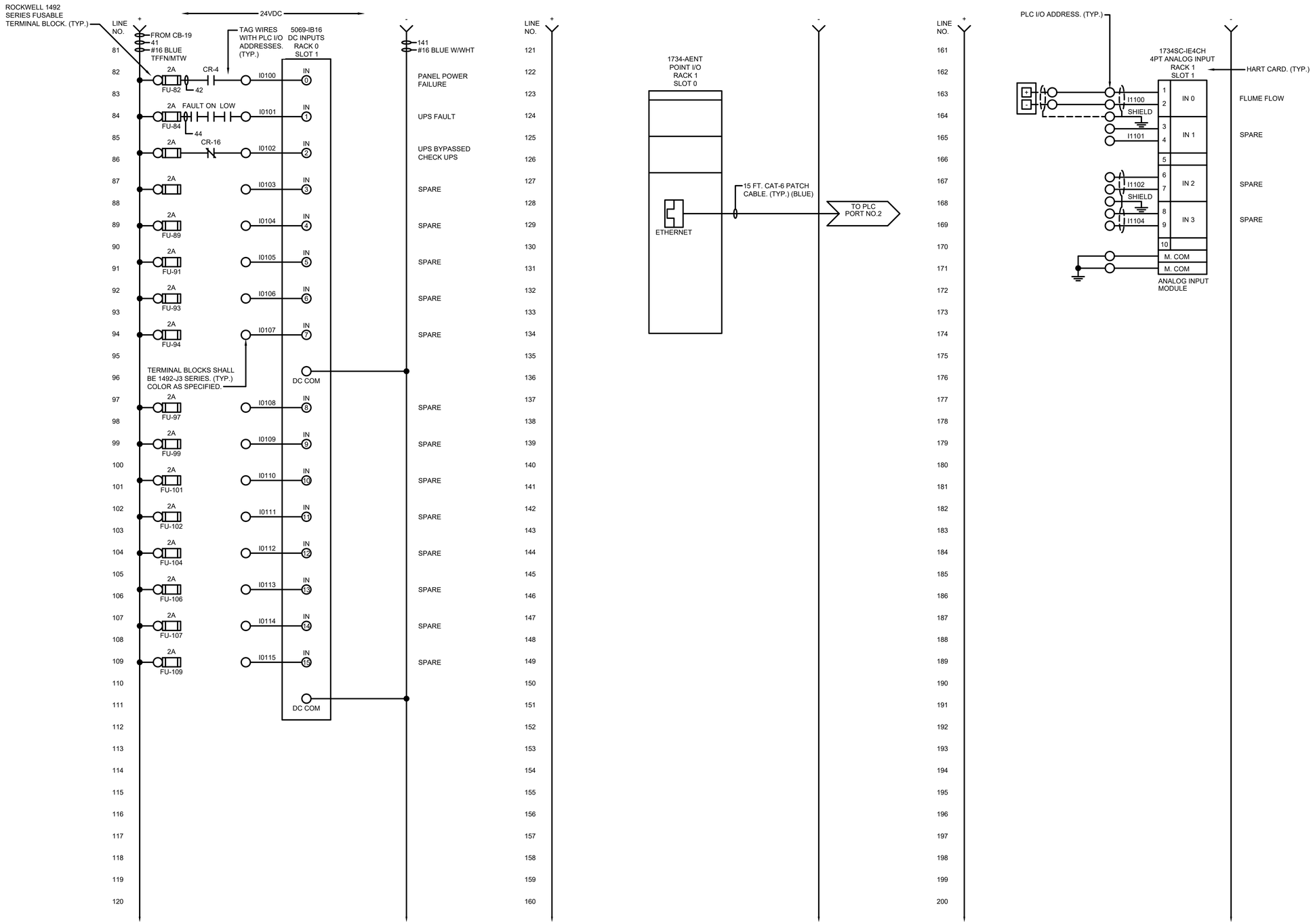

FUTURE. WORK NOT IN CONTRACT.

TETRA TECH
www.tetratech.com
710 AVIS DRIVE
ANN ARBOR, MI 48108
PHONE: (734) 665-6000 FAX: (734) 213-3003

MARK	DATE	DESCRIPTION	BY

CITY OF KALAMAZOO, MICHIGAN
METERING STATIONS CONTROL UPGRADES

O-AVENUE CONTROL PANEL WIRING DIAGRAM

Project No.:	200-19743-21003
Designed By:	GCJ
Drawn By:	JLS
Checked By:	MSJ/GCJ

Bar Measures 1 inch

Copyright: Tetra Tech

2/21/2022 3:10:42 PM - \\TT LOCAL\IER\PROJECTS\ANN ARBOR\IER\19743\200-19743-21003\CAD\SHEETFILES\EMETERING\7_O-AVENUE_PANEL WIR DIA.DWG - SHANK, JASON

DEMOLISH EXISTING FCP FLOW TRANSMITTER, AND FLOWMETER. INSTALL NEW MAGNETIC FLOWMETER. MODIFY EXISTING PIPING AS REQUIRED. PROVIDE MAKEUP SPOOL PIECE AS REQUIRED. INSTALL NEW PIPE SUPPORTS (2). TURN OVER EXISTING METER, AND TRANSMITTER TO OWNER. ASSUME DISTANCE FROM METER VAULT TO BUILDING TO BE 125 FT. PROVIDE CABLE LENGTH (150 FT. MINIMUM) FROM METER TO TRANSMITTER.

SEE NOTES

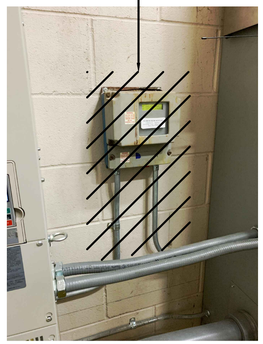

EXISTING LP

PROVIDE NEW 20A BREAKER FOR POWERING NEW METERING CONTROL PANEL.

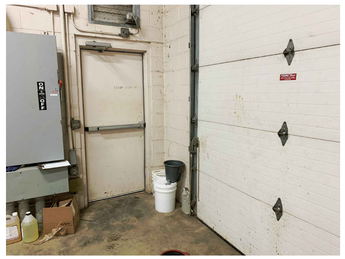

SAW CUT EXISTING CONCRETE WALKWAY. PATCH BACK TO ORIGINAL CONDITION.

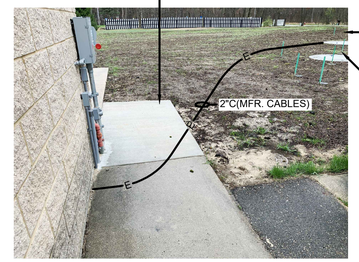

CORE HOLE THROUGH VAULT, AND STATION WALL. SEAL WITH NON-SHRINK GROUT.

DEMOLISH EXISTING F&P FLOW TRANSMITTER, AND FLOWMETER. INSTALL NEW MAGNETIC FLOWMETER. MODIFY EXISTING PIPING AS REQUIRED. PROVIDE MAKEUP SPOOL PIECE AS REQUIRED. INSTALL NEW PIPE SUPPORTS (2). TURN OVER EXISTING METER, AND TRANSMITTER TO OWNER. ASSUME DISTANCE FROM METER VAULT TO BUILDING TO BE 125 FT. PROVIDE CABLE LENGTH (150 FT. MINIMUM) FROM METER TO TRANSMITTER.

STATION PHOTOS

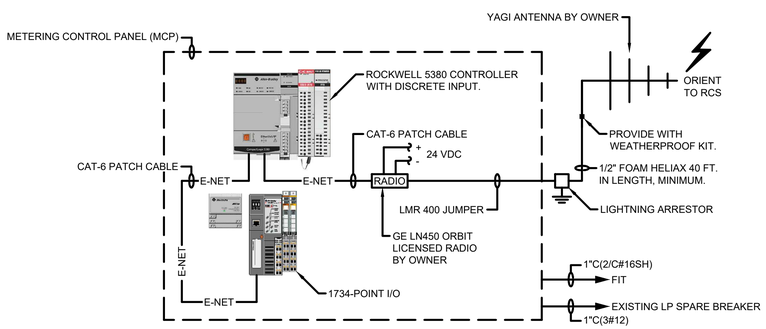

SYSTEM CONFIGURATION DRAWING

NOTE: PLC/RADIO PROGRAMMING BY OWNER/TETRATECH.

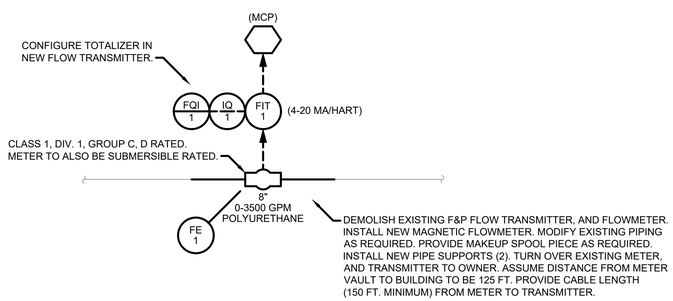

PARTIAL P&ID DIAGRAM

NOTES:

1. INSTALL NEW MCP ON WALL INSIDE EXISTING RAW SEWAGE PUMP STATION. PROVIDE A ¾ INCH CONDUIT WITH 3#12 WIRES AND POWER NEW MCP FROM SPARE BREAKER IN EXISTING PANELBOARD. LABEL SPARE BREAKER IN PANELBOARD WITH NEW MCP DESIGNATION.
2. MOUNT THE NEW MAGNETIC FLOW TRANSMITTER ON WALL IN PLACE OF EXISTING F&P FLOW TRANSMITTER. POWER FROM 24VDC POWER SUPPLY IN NEW MCP.
3. INSTALL 2 - 1 INCH PVC-RMC CONDUITS WITH 3#12 WIRES AND 2/C#18SH CABLE FROM THE NEW FIT TO THE NEW MCP.
4. FROM THE NEW MCP, INSTALL THE ½ INCH COAXIAL CABLE TO THE NEW YAGI ANTENNA. LOCATE NEW ANTENNA ON A NEW 24 FOOT LONG 2 INCH ALUMINUM SCHEDULE 40 MAST PIPE MOUNTED ON THE SIDE OF THE EXISTING RAW SEWAGE PUMP STATION. GROUND MAST PIPE WITH N0.6 AWG RHW-USE WIRE. INSTALL TWO GROUND RODS IN YARD AREA NEAR EXISTING FLOW MONITORING BUILDING AND EXTERIOR MOUNTED MCP. CONNECT NO.6 WIRE TO GROUNDS RODS.
5. OBTAIN THE SERVICES OF OUDBIER CALIBRATION SERVICES TO SET UP THE TRANSMITTER, CALIBRATE AND PLACE ON-LINE.
6. FURNISH AND INSTALL A NEW 2 INCH PVC-RMC CONDUIT WITH MANUFACTURER CABLES TO THE EXISTING METER VAULT LOCATED IN THE YARD APPROXIMATELY 125 FEET FROM THE PUMP STATION. DIRECT BURY A NEW PVC-RMC CONDUIT FROM PUMP STATION TO METER LOCATION. GRADE AREA BACK TO ORIGINAL CONDITION. SAW CUT EXISTING SIDEWALK AND WALKWAY AREAS AS REQUIRED TO SUIT NEW CONDUIT INSTALLATION AND PATCH AREAS BACK TO ORIGINAL CONDITION.
7. TURN OVER EXISTING FLOWMETER, AND TRANSMITTER TO OWNER.

TETRA TECH
www.tetratech.com
710 AVIS DRIVE
ANN ARBOR, MI 48108
PHONE: (734) 665-6000 FAX: (734) 213-3003

MARK	DATE	DESCRIPTION	BY

CITY OF KALAMAZOO, MICHIGAN
METERING STATIONS CONTROL UPGRADES
MATTAWAN METERING STATION
ONE-LINES, DETAILS

Project No.:	200-19743-21003
Designed By:	GCJ
Drawn By:	JLS
Checked By:	MSJ/GCJ

Copyright: Tetra Tech

Bar Measures 1 inch

4/27/2022 12:32:01 PM - \\TT.LOCAL\IER\PROJECTS\ANN ARBOR\IER\19743\200-19743-21003\CAD\SHEETFILES\METERING\8_MATTAWAN_ONELINE_DETAILS.DWG - SHANK, JASON

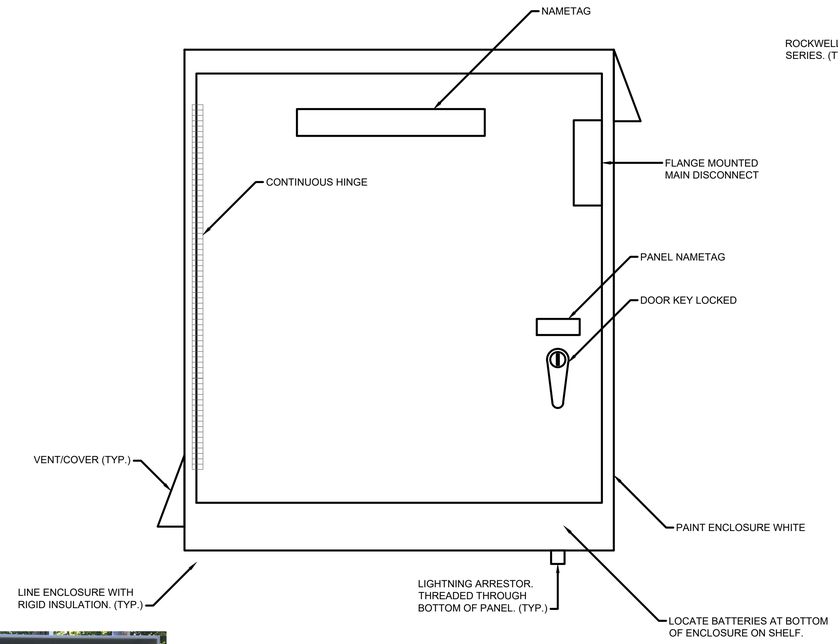

METERING STATION CONTROL PANEL LAYOUT

NEMA 4 ENCLOSURE
SIZE: 42"H X 36"W X12"D (MIN.)
PANEL TO BE CONSTRUCTED BY A UL LISTED PANEL SHOP.

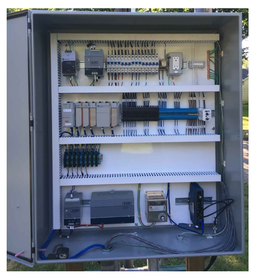

SAMPLE METERING PANEL LAYOUT

NO SCALE

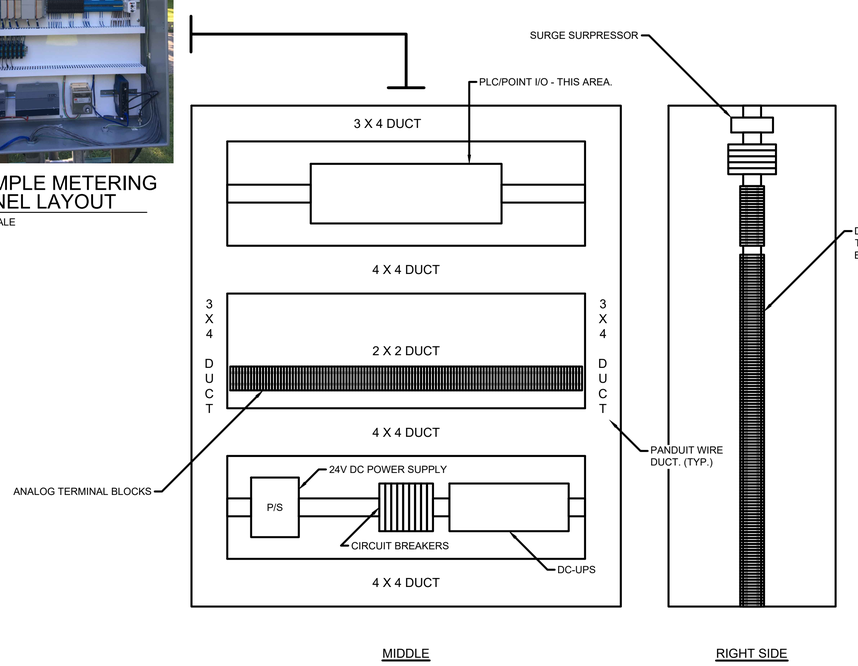

GENERAL SUBPLATE LAYOUT

PAINT INSIDE: GLOSS WHITE.
NOTE: NOT ALL SUBPLATE DEVICES ARE SHOWN.
SEE WIRING DIAGRAMS FOR ADDITIONAL REQUIREMENTS. (TYP.)

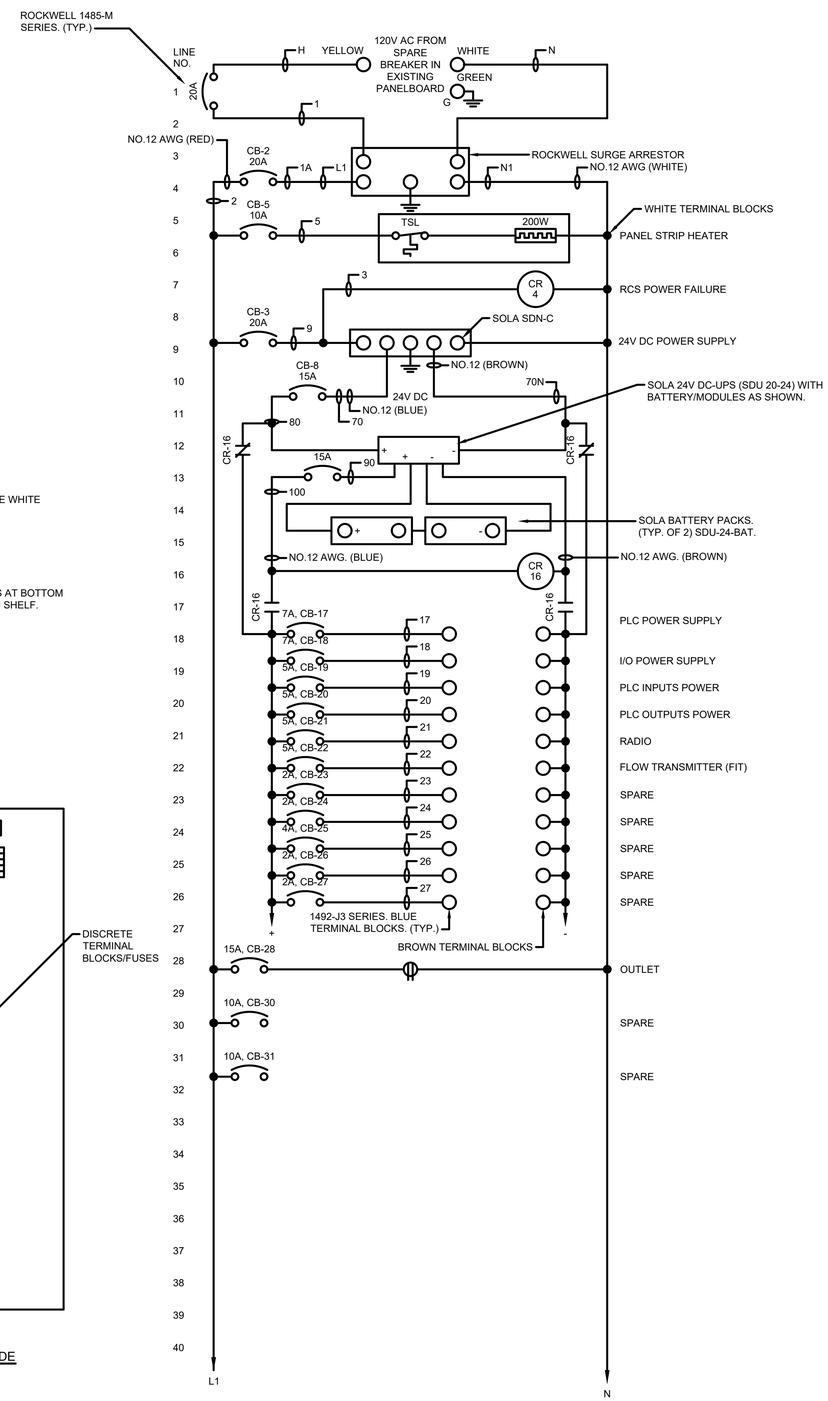

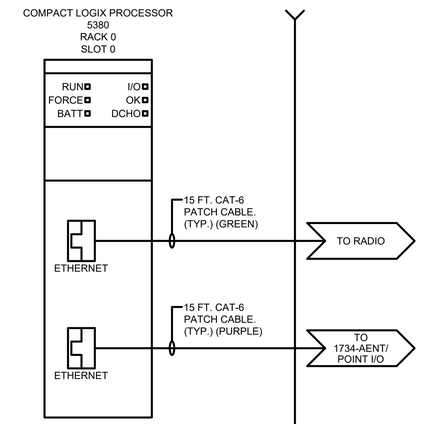

PROVIDE ARC FLASH WARNING LABEL. (TYP. ALL PANELS)

TETRA TECH
www.tetratech.com
710 AVIS DRIVE
ANN ARBOR, MI 48108
PHONE: (734) 665-6000 FAX: (734) 213-3003

MARK	DATE	DESCRIPTION	BY

CITY OF KALAMAZOO, MICHIGAN
METERING STATIONS CONTROL UPGRADES
MATTAWAN CONTROL PANEL LAYOUT, WIRING DIAGRAM

Project No.:	200-19743-21003
Designed By:	GCJ
Drawn By:	JLS
Checked By:	MSJ/GCJ

Copyright: Tetra Tech

Bar Measures 1 inch

4/27/2022 12:33:08 PM - \\TT.LOCAL\IER\PROJECTS\ANN ARBOR\IER\19743\200-19743-21003\CAD\SHEETFILES\METERING\9_MATTAWAN_PANEL LAYOUT_WIR DIA.DWG - SHANK, JASON

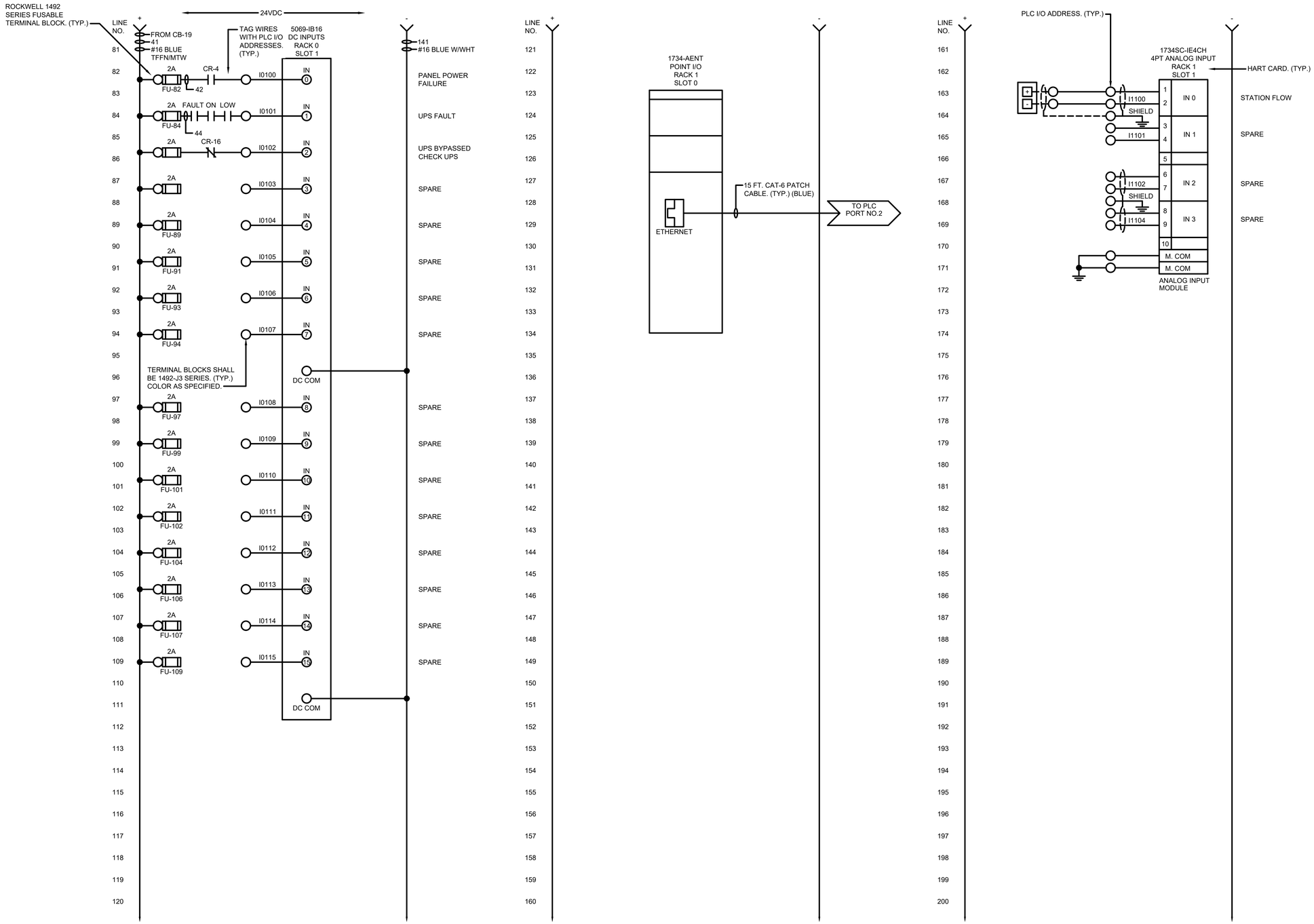

TETRA TECH

www.tetratech.com
710 AVIS DRIVE
ANN ARBOR, MI 48108
PHONE: (734) 665-6000 FAX: (734) 213-3003

MARK	DATE	DESCRIPTION	BY

CITY OF KALAMAZOO, MICHIGAN
METERING STATIONS CONTROL UPGRADES

MATTAWAN CONTROL PANEL WIRING DIAGRAM

Project No.:	200-19743-21003
Designed By:	GCJ
Drawn By:	JLS
Checked By:	MSJ/GCJ

Copyright: Tetra Tech

Bar Measures 1 inch

4/27/2022 12:33:52 PM - \\TT.LOCAL\IER\PROJECTS\ANN ARBOR\IER\19743\200-19743-21003\CAD\SHEETFILES\E\METERING\10_MATTAWAN_PANEL WIR DIA.DWG - SHANK, JASON

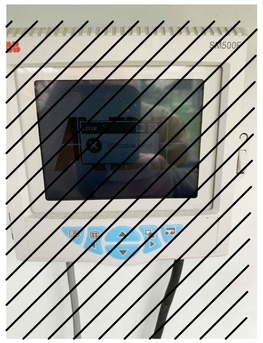

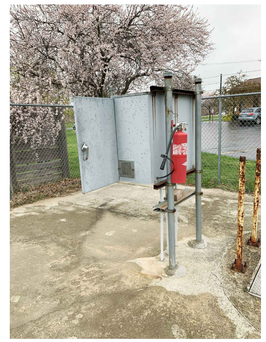

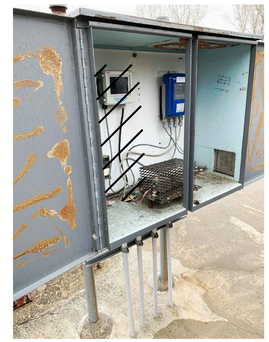

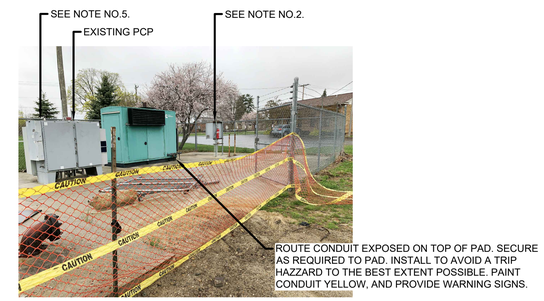

STATION PHOTOS

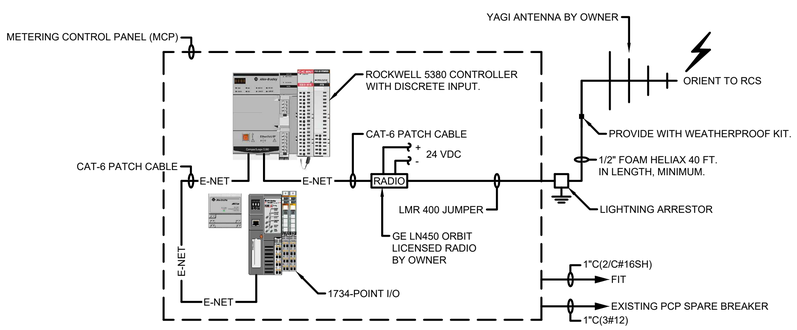

SYSTEM CONFIGURATION DRAWING

NOTE: PLC/RADIO PROGRAMMING BY OWNER/TETRATECH.

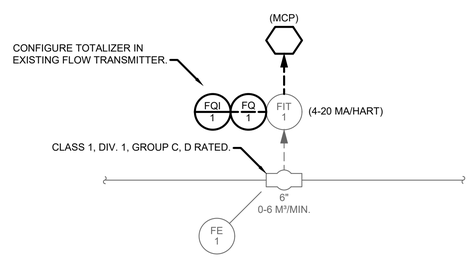

PARTIAL P&ID DIAGRAM

NOTES:

1. INSTALL NEW MCP OUTSIDE ON A NEW 316 STAINLESS STEEL STRUT SUPPORT RACK. PROVIDE A ¾ INCH CONDUIT WITH 3#12 WIRES AND POWER FROM SPARE BREAKER WITHIN EXISTING PANELBOARD. LABEL SPARE BREAKER IN PANELBOARD WITH NEW MCP DESIGNATION.
2. INSTALL A 1 INCH CONDUIT WITH 2/C#18SH CABLE TO THE NEW MCP FROM THE EXISTING MAGNETIC FLOW TRANSMITTER/PANEL.
3. FROM THE NEW MCP, INSTALL THE ½ INCH COAXIAL CABLE TO THE NEW YAGI ANTENNA. LOCATE NEW ANTENNA ON A NEW 24 FOOT LONG 2 INCH SCHEDULE 40 ALUMINUM MAST PIPE MOUNTED ON THE BACKSIDE OF THE NEW STRUT SUPPORT RACK. GROUND MAST PIPE WITH N0.6 AWG RHW-USE WIRE. INSTALL TWO GROUND RODS IN YARD AREA NEAR EXISTING EQUIPMENT RACK AND EXTERIOR MOUNTED MCP. CONNECT NO.6 WIRE TO GROUNDS RODS.
4. OBTAIN THE SERVICES OF OUDBIER CALIBRATION SERVICES TO SET UP THE TRANSMITTER, CALIBRATE AND PLACE ON-LINE.
5. INSTALL NEW PANEL ON 316 STAINLESS STEEL STRUT SUPPORT RACK. SECURE STRUT TO CONCRETE PAD. PROVIDE 3/4"C WITH 3#12, AND PWER FROM SPARE 120V BREAKERS IN EXISTING PANELBOARD. RE-LABEL EXISTING PANELBOARD DIRECTORY AS REQUIRED.

TETRA TECH
www.tetratech.com
710 AVIS DRIVE
ANN ARBOR, MI 48108
PHONE: (734) 665-6000 FAX: (734) 213-3003

MARK	DATE	DESCRIPTION	BY

CITY OF KALAMAZOO, MICHIGAN
METERING STATIONS CONTROL UPGRADES
VICKSBURG METERING STATION
ONE-LINES, DETAILS

Project No.:	200-19743-21003
Designed By:	GCJ
Drawn By:	JLS
Checked By:	MSJ/GCJ

Copyright: Tetra Tech

Bar Measures 1 inch

4/27/2022 12:35:25 PM - \\TT.LOCAL\IER\PROJECTS\ANN ARBOR\IER\19743\200-19743-21003\CAD\SHEETFILES\METERING\11_VICKSBURG_ONELINE_DETAILS.DWG - SHANK, JASON

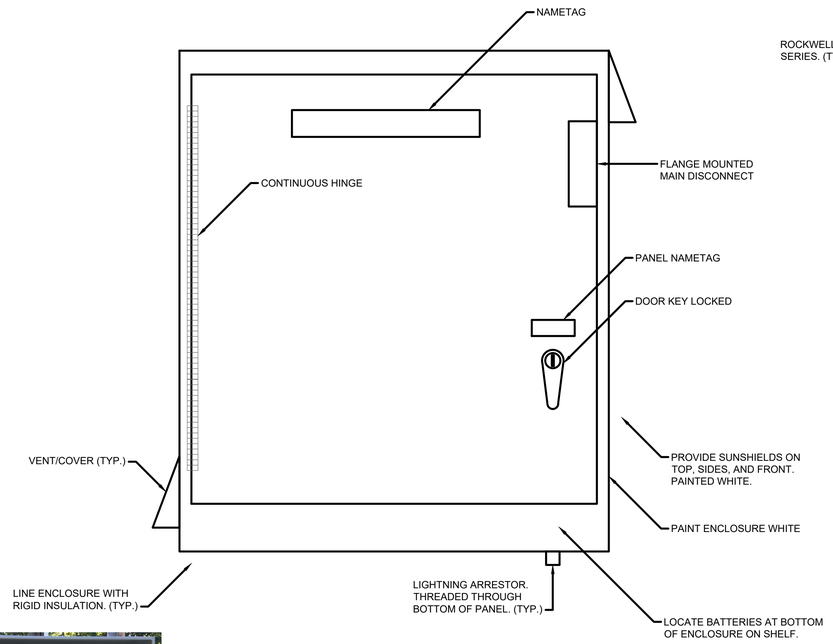

METERING STATION CONTROL PANEL LAYOUT

NEMA 4 ENCLOSURE
SIZE: 42"H X 36"W X12"D (MIN.)
PANEL TO BE CONSTRUCTED BY A UL LISTED PANEL SHOP.
PLC/RADIO PROGRAMMING BY OWNER.

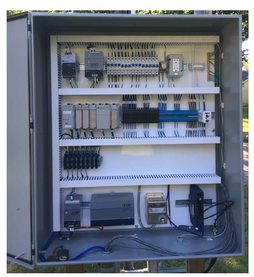

SAMPLE METERING PANEL LAYOUT

NO SCALE

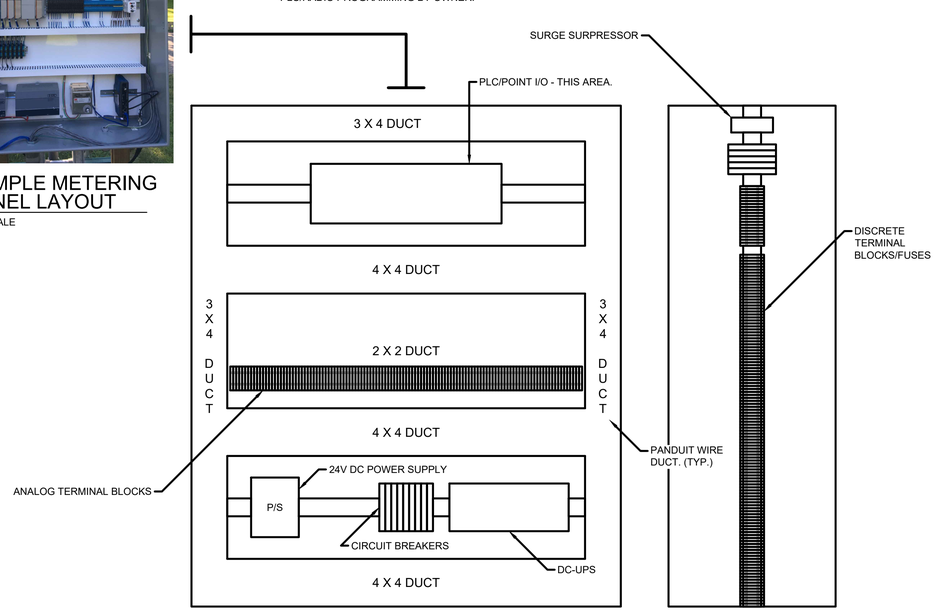

GENERAL SUBPLATE LAYOUT

PAINT INSIDE: GLOSS WHITE.
NOTE: NOT ALL SUBPLATE DEVICES ARE SHOWN.
SEE WIRING DIAGRAMS FOR ADDITIONAL REQUIREMENTS. (TYP.)

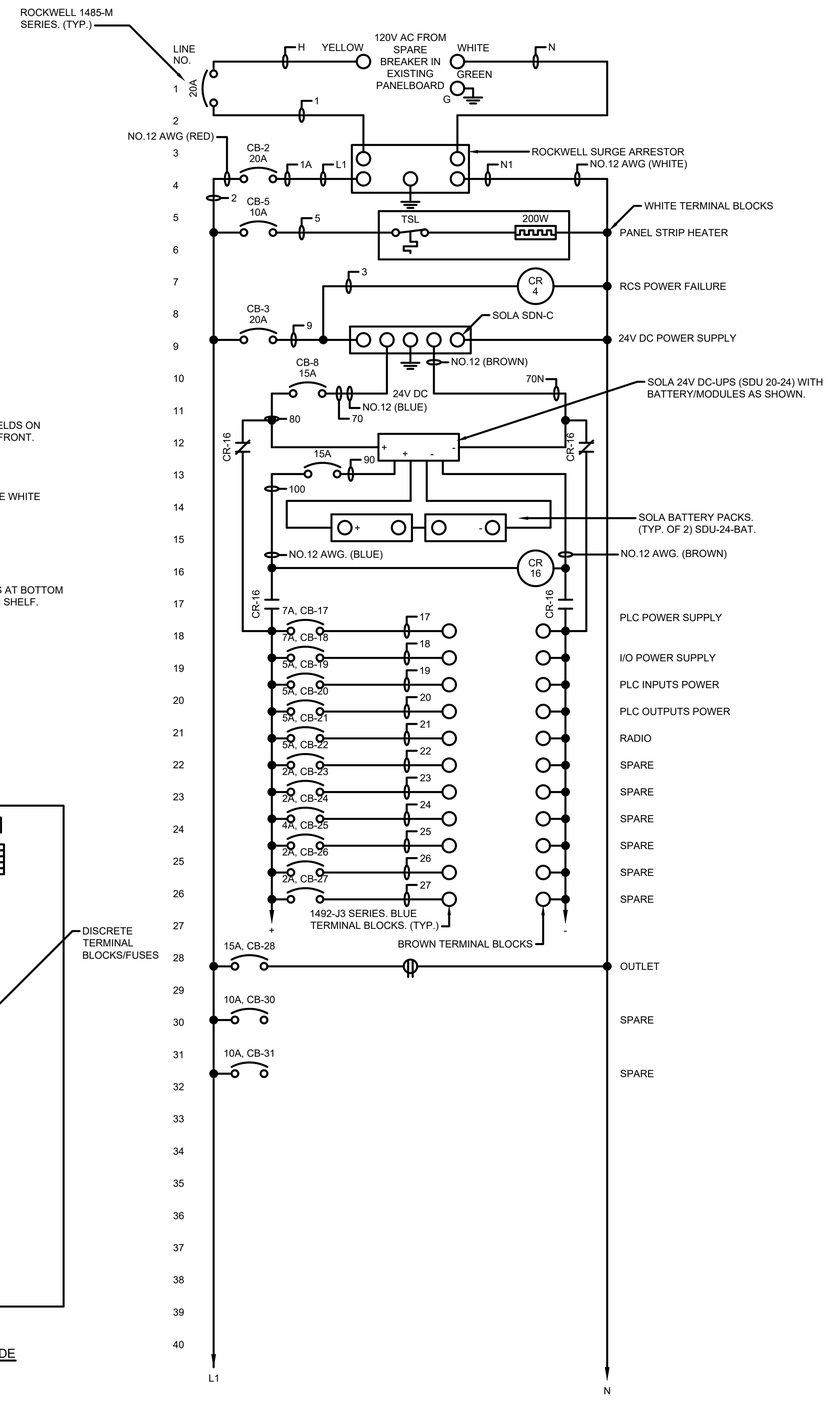

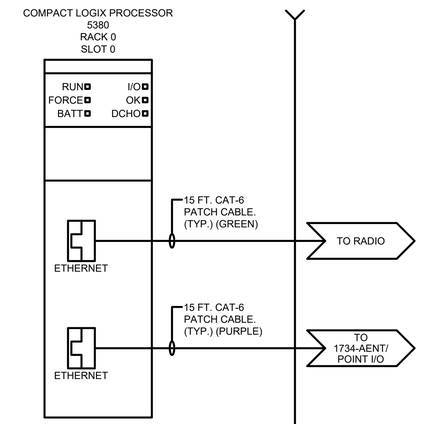

TETRA TECH
www.tetratech.com
710 AVIS DRIVE
ANN ARBOR, MI 48108
PHONE: (734) 665-6000 FAX: (734) 213-3003

MARK	DATE	DESCRIPTION	BY

CITY OF KALAMAZOO, MICHIGAN
METERING STATIONS CONTROL UPGRADES
VICKSBURG CONTROL PANEL LAYOUT, WIRING DIAGRAM

Project No.:	200-19743-21003
Designed By:	GCJ
Drawn By:	JLS
Checked By:	MSJ/GCJ

Copyright: Tetra Tech

Bar Measures 1 inch

4/27/2022 12:36:36 PM - \\TT.LOCAL\ER\PROJECTS\ANN ARBOR\ER19743\200-19743-21003\CAD\SHEETFILES\EMETERING\12_VICKSBURG_PANEL LAYOUT_WIR DIA.DWG - SHANK, JASON

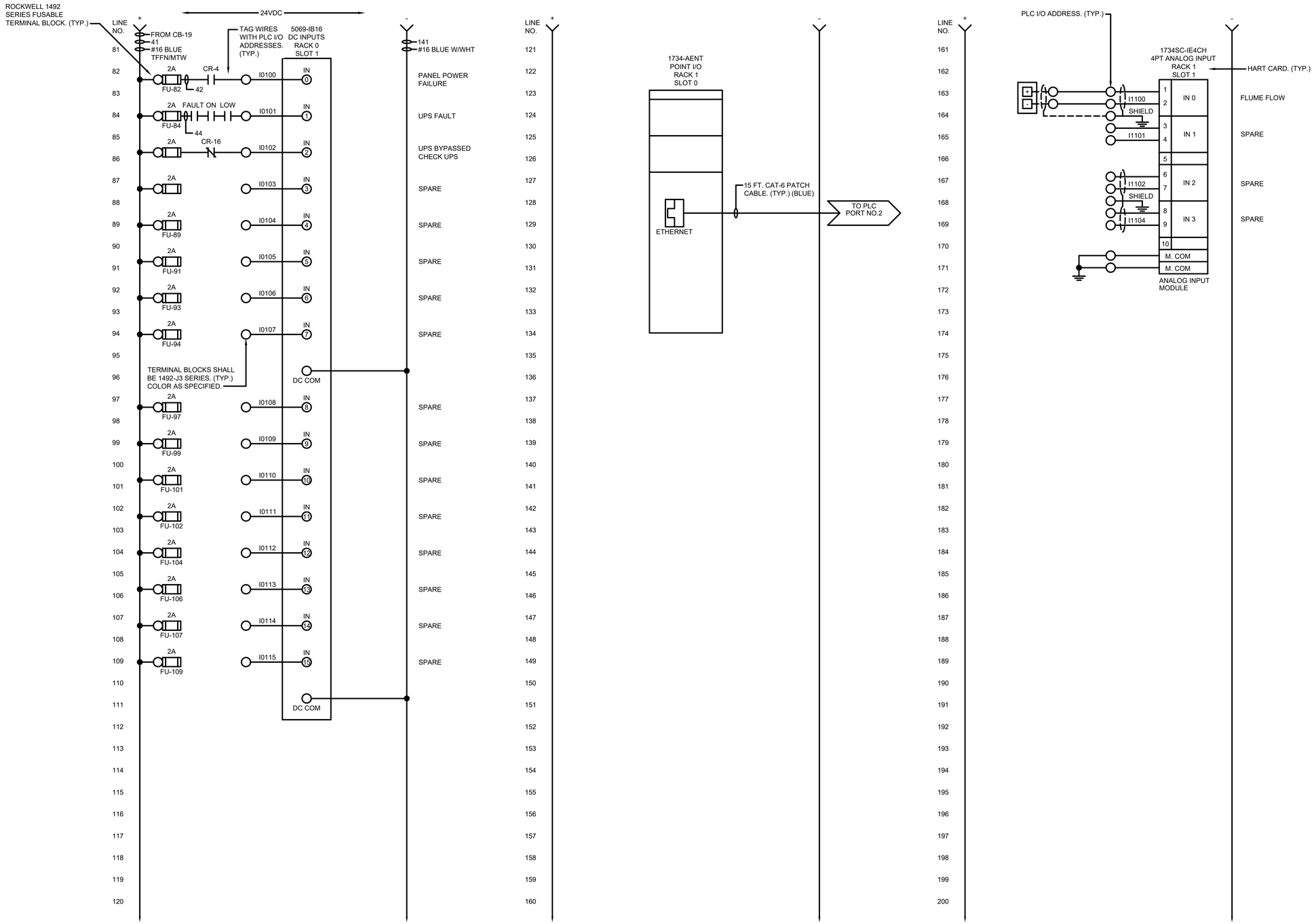

TETRA TECH
www.tetratech.com
710 AVIS DRIVE
ANN ARBOR, MI 48108
PHONE: (734) 665-6000 FAX: (734) 213-3003

MARK	DATE	DESCRIPTION	BY

CITY OF KALAMAZOO, MICHIGAN
METERING STATIONS CONTROL UPGRADES

VICKSBURG CONTROL PANEL WIRING DIAGRAM

Project No.:	200-19743-21003
Designed By:	GCJ
Drawn By:	JLS
Checked By:	MSJ/GCJ

Copyright: Tetra Tech

Bar Measures 1 inch

2/21/2022 3:11:48 PM - \\TT LOCAL\IER\PROJECTS\ANN ARBOR\IER\19743\200-19743-21003\CAD\SHEETFILES\E\METERING\13_VICKSBURG_PANEL WIR DIA.DWG - SHANK, JASON

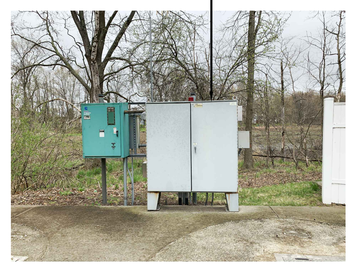

STATION PHOTOS

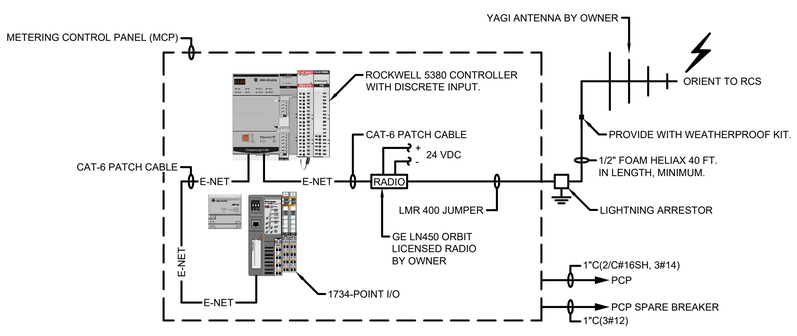

SYSTEM CONFIGURATION DRAWING

NOTE: PLC/RADIO PROGRAMMING BY OWNER/TETRATECH.

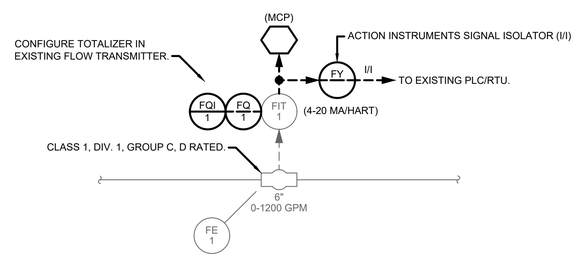

PARTIAL P&ID DIAGRAM

NOTES:

1. INSTALL NEW MCP OUTSIDE NEAR EXISTING OUTDOOR EQUIPMENT STRUT RACK. PROVIDE NEW 316 STAINLESS STEEL STRUT AND MOUNT NEW PANEL SECURE RACK TO CONCRETE PAD. PROVIDE A 1 INCH CONDUIT WITH 3#12 WIRES AND POWER FROM EXISTING PANELBOARD. LABEL SPARE BREAKER IN EXISTING PANELBOARD WITH NEW MCP DESIGNATION.
2. INSTALL A 1 INCH CONDUIT WITH 2/C#18SH CABLE TO THE NEW MCP FROM THE EXISTING ABB MAGNETIC FLOW TRANSMITTER INSIDE THE EXISTING CONTROL PANEL.
3. FROM THE NEW MCP, INSTALL THE ½ INCH COAXIAL CABLE TO THE NEW YAGI ANTENNA. LOCATE NEW ANTENNA ON A NEW 24 FOOT LONG 2 INCH SCHEDULE 40 ALUMINUM MAST PIPE MOUNTED ON THE BACKSIDE OF THE EXISTING STRUT RACK. GROUND MAST PIPE WITH N0.6 AWG RHW-USE WIRE. INSTALL TWO GROUND RODS IN YARD AREA NEAR EXISTING STRUT SUPPORT RACK. CONNECT NO.6 WIRE TO GROUNDS RODS
4. OBTAIN THE SERVICES OF OUDBIER CALIBRATION SERVICES TO SET UP THE TRANSMITTER, CALIBRATE AND PLACE ON-LINE.
5. INSTALL A SIGNAL ISOLATOR (I/I) TO FEED THE EXISTING 4-20 MA FLOW SIGNAL TO THE NEW MCP, AND THEN RE-TRANSMIT TO EXISTING PLC/RTU.

TETRA TECH
www.tetratech.com
710 AVIS DRIVE
ANN ARBOR, MI 48108
PHONE: (734) 665-6000 FAX: (734) 213-3003

MARK	DATE	DESCRIPTION	BY

CITY OF KALAMAZOO, MICHIGAN
METERING STATIONS CONTROL UPGRADES
SOUTH COUNTY METERING STATION
ONE-LINES, DETAILS

Project No.:	200-19743-21003
Designed By:	GCJ
Drawn By:	JLS
Checked By:	MSJ/GCJ

Copyright: Tetra Tech

Bar Measures 1 inch

4/27/2022 12:56:00 PM - \\TT.LOCAL\IER\PROJECTS\ANN ARBOR\IER\19743\200-19743-21003\CAD\SHEETFILES\METERING\14_SOUTH COUNTY_ONELINE_DETAILS.DWG - SHANK, JASON

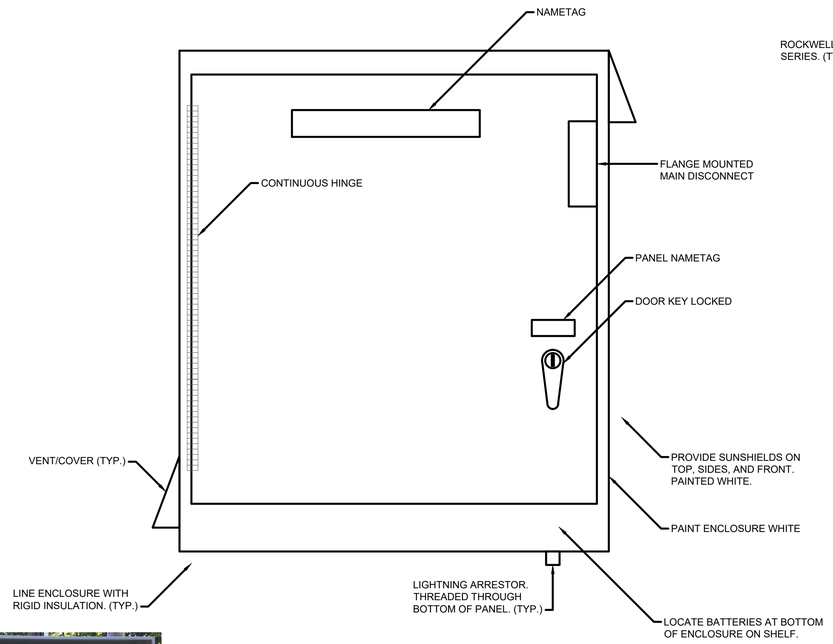

METERING STATION CONTROL PANEL LAYOUT

NEMA 4 ENCLOSURE
SIZE: 42"H X 36"W X12"D (MIN.)
PANEL TO BE CONSTRUCTED BY A UL LISTED PANEL SHOP.

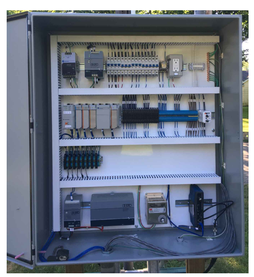

SAMPLE METERING PANEL LAYOUT

NO SCALE

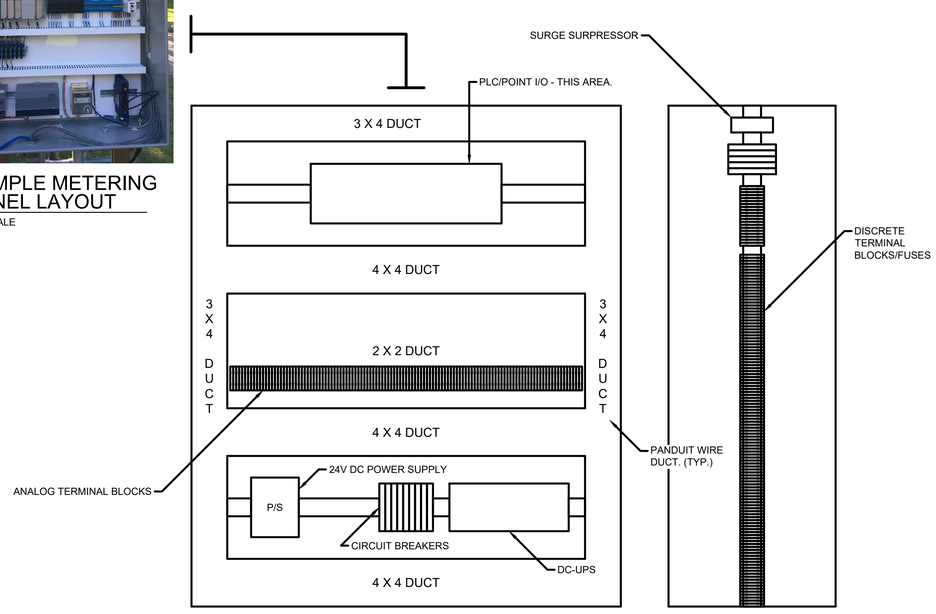

GENERAL SUBPLATE LAYOUT

PAINT INSIDE: GLOSS WHITE.
NOTE: NOT ALL SUBPLATE DEVICES ARE SHOWN.
SEE WIRING DIAGRAMS FOR ADDITIONAL REQUIREMENTS. (TYP.)

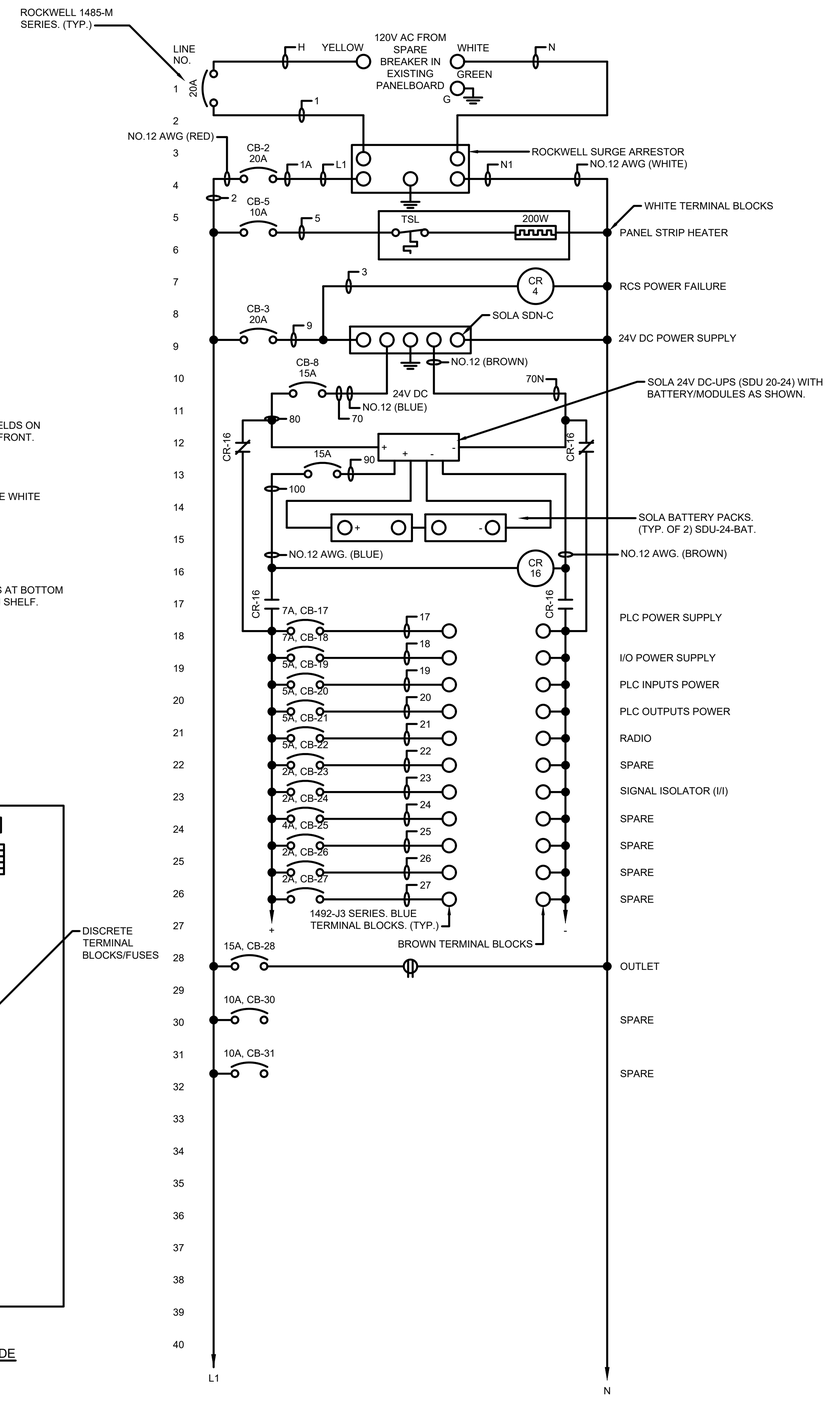

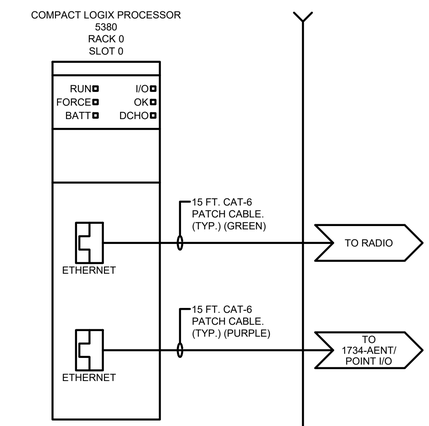

TETRA TECH
www.tetratech.com
710 AVIS DRIVE
ANN ARBOR, MI 48108
PHONE: (734) 665-6000 FAX: (734) 213-3003

MARK	DATE	DESCRIPTION	BY

CITY OF KALAMAZOO, MICHIGAN
METERING STATIONS CONTROL UPGRADES
SOUTH COUNTY CONTROL PANEL LAYOUT, WIRING DIAGRAM

Project No.:	200-19743-21003
Designed By:	GCJ
Drawn By:	JLS
Checked By:	MSJ/GCJ

Copyright: Tetra Tech

Bar Measures 1 inch

4/27/2022 12:39:41 PM - \\TT.LOCAL\ER\PROJECTS\ANN ARBOR\ER19743\200-19743-21003\CAD\SHEETFILES\EMETERING\15_SOUTH COUNTY_PANEL LAYOUT_WIR DIA.DWG - SHANK, JASON

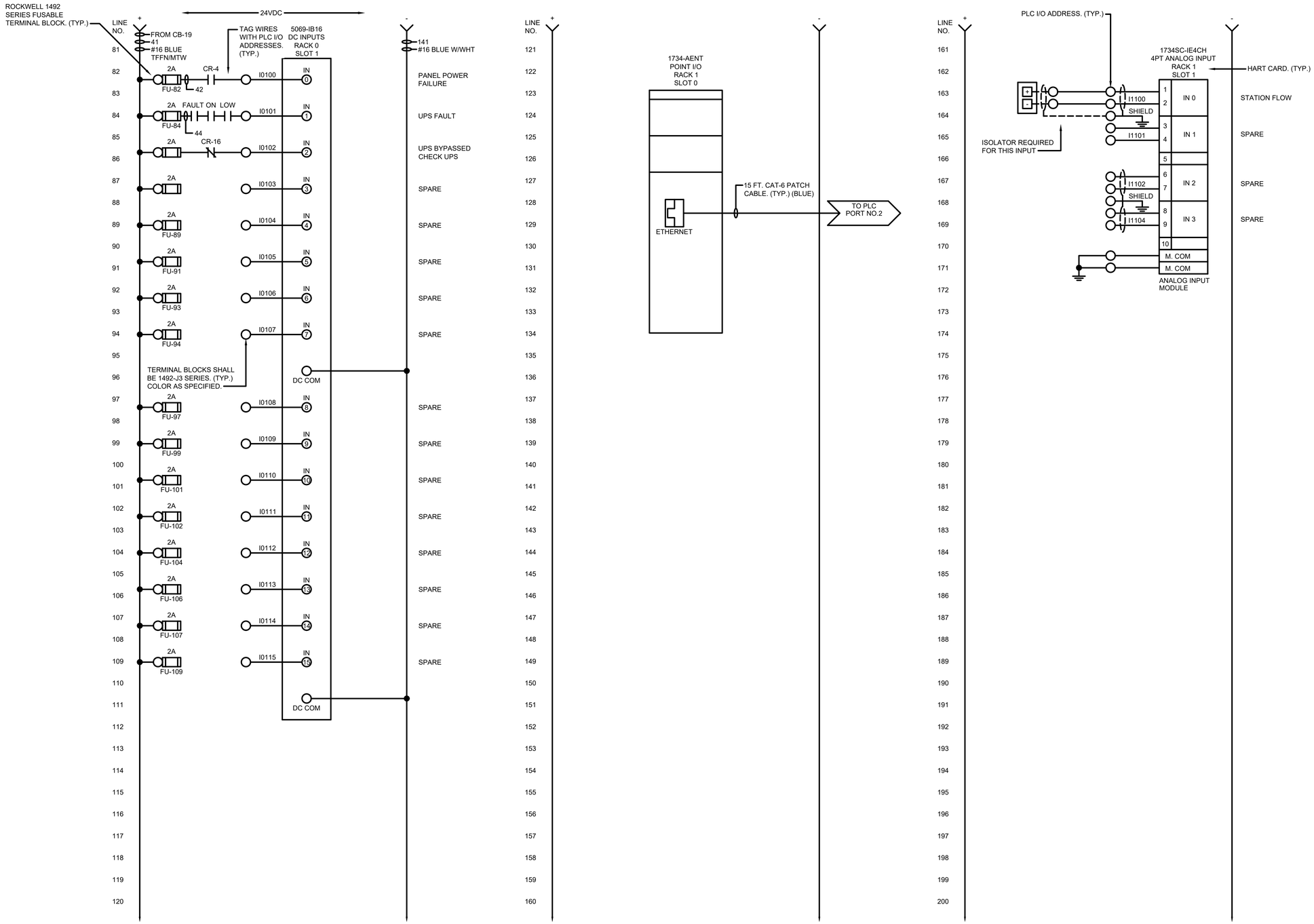

TETRA TECH
www.tetratech.com
710 AVIS DRIVE
ANN ARBOR, MI 48108
PHONE: (734) 665-6000 FAX: (734) 213-3003

MARK	DATE	DESCRIPTION	BY

CITY OF KALAMAZOO, MICHIGAN
METERING STATIONS CONTROL UPGRADES

SOUTH COUNTY CONTROL PANEL WIRING DIAGRAM

Project No.:	200-19743-21003
Designed By:	GCJ
Drawn By:	JLS
Checked By:	MSJ/GCJ

Copyright: Tetra Tech

Bar Measures 1 inch

4/27/2022 12:41:12 PM - \\TT.LOCAL\IER\PROJECTS\ANN ARBOR\IER\19743\200-19743-21003\CAD\SHEETFILES\EMETERING\16_SOUTH COUNTY_PANEL WIR DIA.DWG - SHANK, JASON

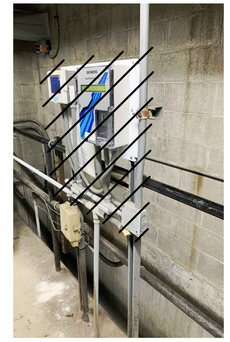

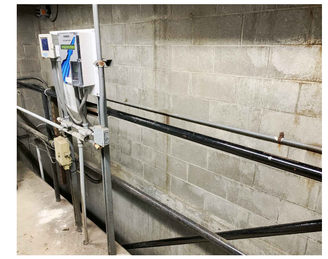

STATION PHOTOS

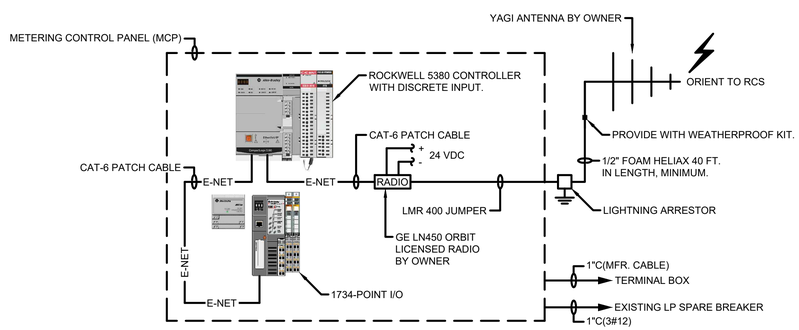

SYSTEM CONFIGURATION DRAWING

NOTE: PLC/RADIO PROGRAMMING BY OWNER/TETRATECH.

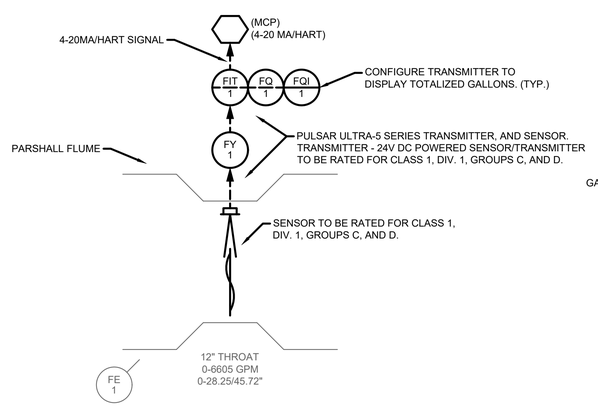

PARTIAL P&ID DIAGRAM

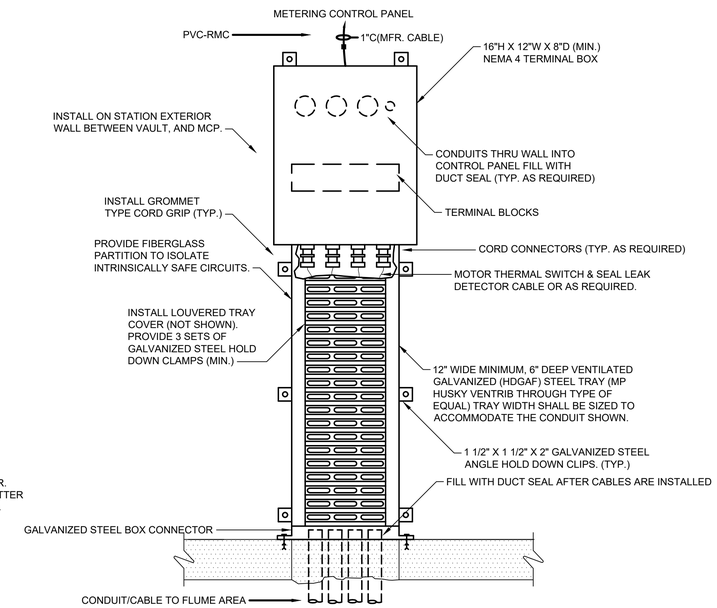

VENTED TRAY DETAIL

PARSHALL FLUME

NOTES:

1. INSTALL NEW MCP WITHIN EXISTING FLOW METERING BUILDING. MOUNT OFF EXISTING HANDRAIL. DEMOLISH THE EXISTING MILLETRONICS FLOW TRANSMITTER AND SENSOR. PROVIDE A 1 INCH CONDUIT WITH 3#12 WIRES AND POWER NEW MCP FROM EXISTING PANELBOARD. LABEL SPARE BREAKER IN PANELBOARD WITH NEW MCP DESIGNATION.
2. MOUNT THE NEW PULSAR FLOW TRANSMITTER INSIDE THE EXISTING METERING CABINET. POWER FROM 24VDC POWER SUPPLY IN NEW MCP.
3. FROM THE NEW MCP, INSTALL THE ½ INCH COAXIAL CABLE TO THE NEW YAGI ANTENNA. LOCATE NEW ANTENNA ON A NEW 24 FOOT LONG 2 INCH ALUMINUM SCHEDULE 40 MAST PIPE MOUNTED ON THE SIDE OF THE EXISTING FLOW METERING BUILDING. GROUND MAST PIPE WITH N0.6 AWG RHW-USE WIRE. INSTALL TWO GROUND RODS IN YARD AREA NEAR EXISTING FLOW MONITORING BUILDING AND BOND TO MAST PIPE. CONNECT NO.6 WIRE TO GROUNDS RODS.
4. TURN OVER EXISTING MILLETRONICS FLOW TRANSMITTER AND SENSOR TO OWNER.
5. OBTAIN THE SERVICES OF OUDBIER CALIBRATION SERVICES TO SET UP THE TRANSMITTER, CALIBRATE AND PLACE ON-LINE.
6. INSTALL THE NEW FLOW SENSOR IN PLACE OF THE EXISTING MILLETRONICS SENSOR. INSTALL NEW 1 INCH PVC-RMC CONDUIT BETWEEN METERING BUILDING AND FLOW SENSOR VAULT/MANHOLE. ASSUME FOR 50 FEET OF PVC-RMC CONDUIT AND WIRE TO BE INSTALLED. FLOW SENSOR IS IN A NEMA 7 AREA. PROVIDE SEAL FITTINGS AS REQUIRED ON THIS CONDUIT. PROVIDE NEW STAINLESS STEEL MOUNTING HARDWARE FOR INSTALLING SENSOR OVER EXISTING FLUME. FIELD VERIFY CONDUIT ROUTING, AND INSTALLATION PRIOR TO BIDS. CORE HOLES AS REQUIRED TO SUIT CONDUIT INSTALLATION. PATCH BACK TO ORIGINAL CONDITION WITH NON-SHRINK GROUT.

TETRA TECH
www.tetratech.com
710 AVIS DRIVE
ANN ARBOR, MI 48108
PHONE: (734) 665-6000 FAX: (734) 213-3003

MARK	DATE	DESCRIPTION	BY

CITY OF KALAMAZOO, MICHIGAN
METERING STATIONS CONTROL UPGRADES
PFIZER METERING STATION ONE-LINES, DETAILS

Project No.:	200-19743-21003
Designed By:	GCJ
Drawn By:	JLS
Checked By:	MSJ/GCJ

Copyright: Tetra Tech

Bar Measures 1 inch

4/27/2022 12:43:35 PM - \\TT LOCAL\IER\PROJECTS\ANN ARBOR\IER\19743\200-19743-21003\CAD\SHEETFILES\METERING\17_PFIZER_ONELINE_DETAILS.DWG - SHANK, JASON

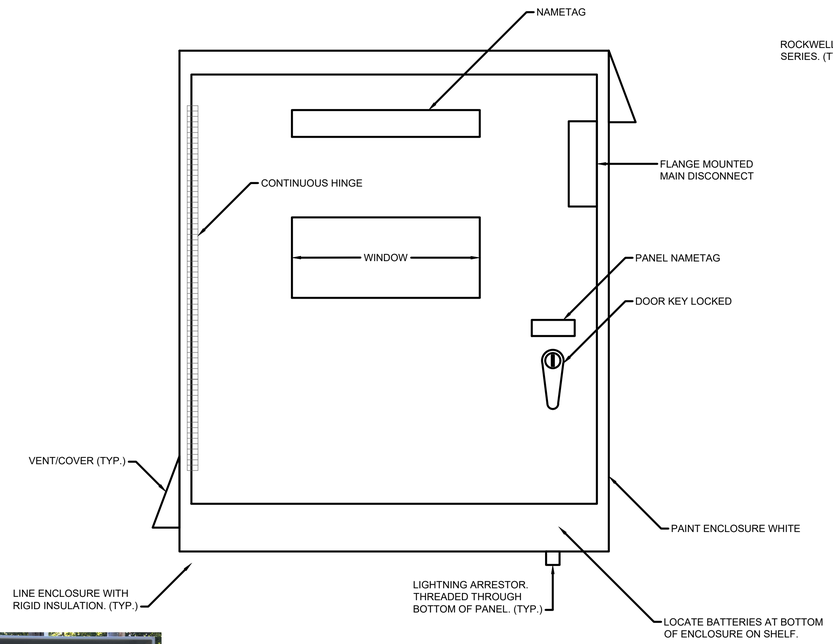

METERING STATION CONTROL PANEL LAYOUT

NEMA 4 ENCLOSURE
SIZE: 42"H X 36"W X12"D (MIN.)
PANEL TO BE CONSTRUCTED BY A UL LISTED PANEL SHOP.

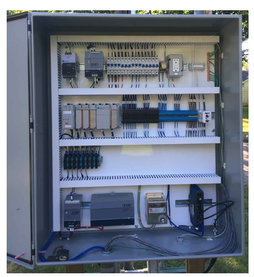

SAMPLE METERING PANEL LAYOUT

NO SCALE

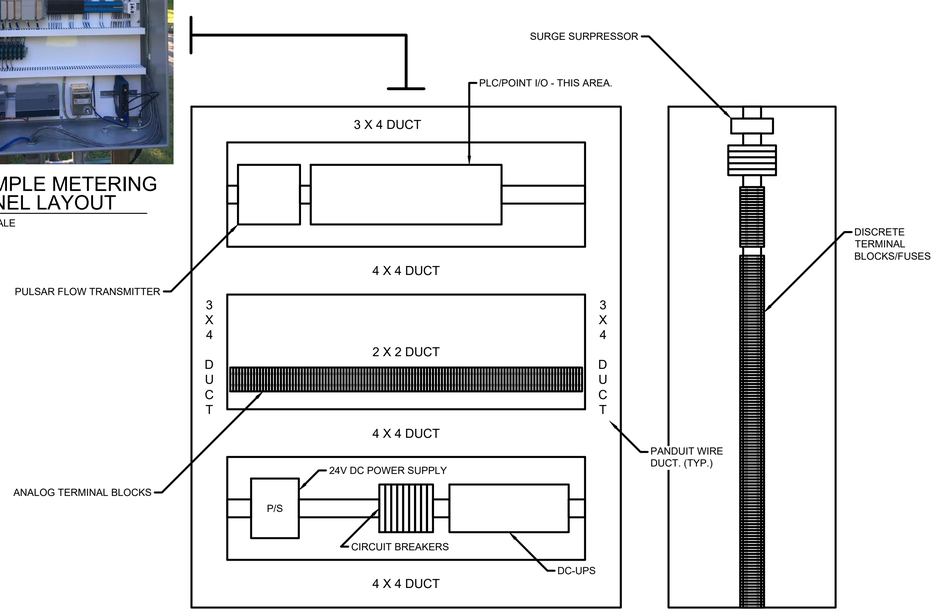

GENERAL SUBPLATE LAYOUT

PAINT INSIDE: GLOSS WHITE.
NOTE: NOT ALL SUBPLATE DEVICES ARE SHOWN.
SEE WIRING DIAGRAMS FOR ADDITIONAL REQUIREMENTS. (TYP.)

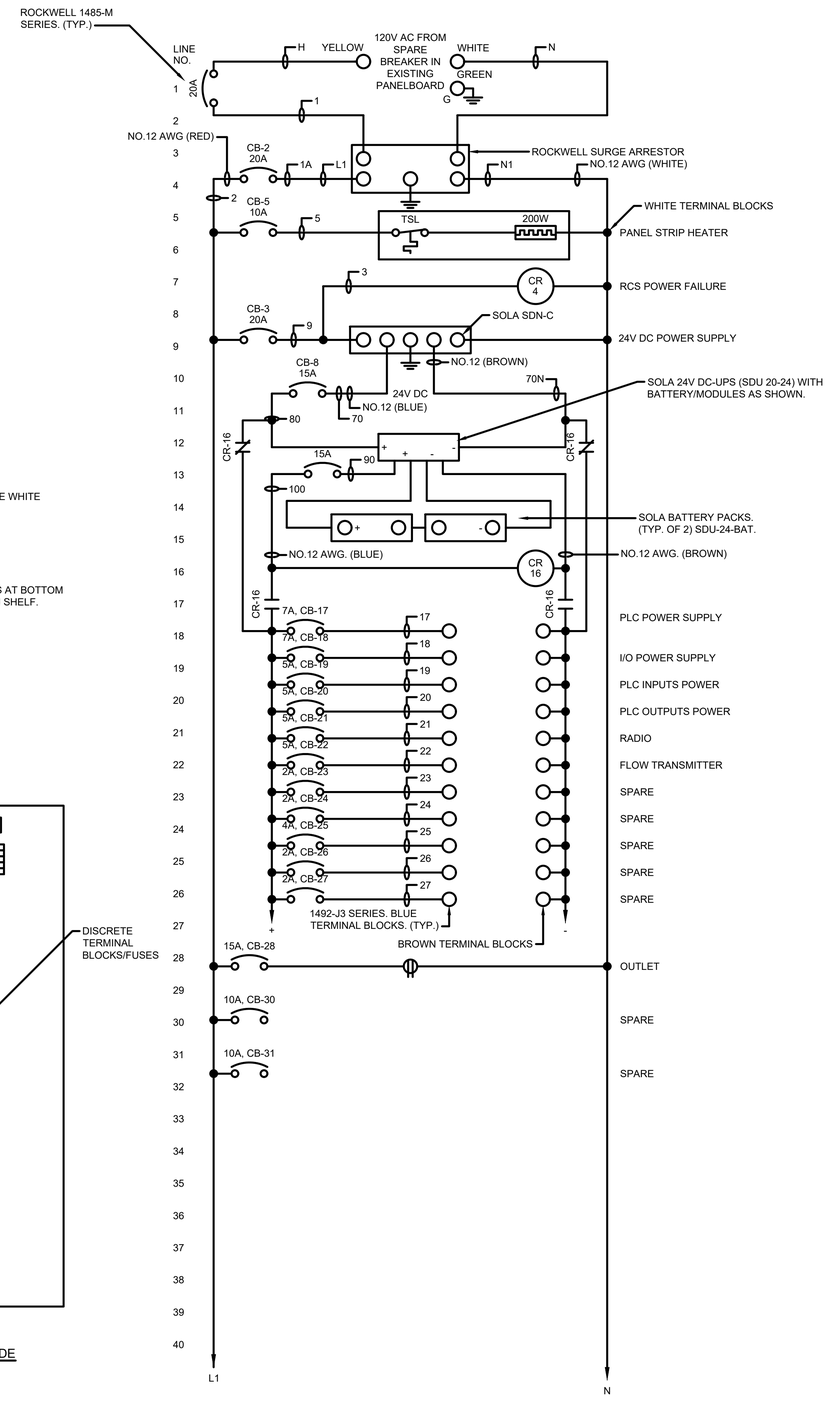

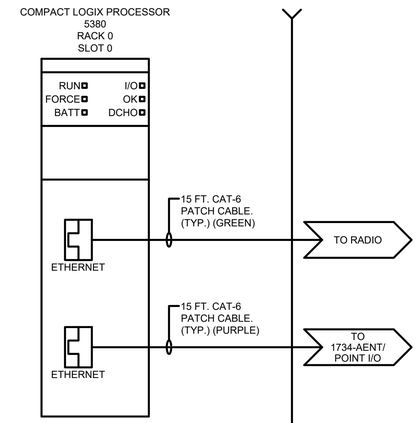

TETRA TECH
www.tetratech.com
710 AVIS DRIVE
ANN ARBOR, MI 48108
PHONE: (734) 665-6000 FAX: (734) 213-3003

MARK	DATE	DESCRIPTION	BY

CITY OF KALAMAZOO, MICHIGAN
METERING STATIONS CONTROL UPGRADES

PFIZER CONTROL PANEL LAYOUT, WIRING DIAGRAM

Project No.:	200-19743-21003
Designed By:	GCJ
Drawn By:	JLS
Checked By:	MSJ/GCJ

Copyright: Tetra Tech

Bar Measures 1 inch

4/27/2022 12:44:46 PM - \\TT.LOCAL\ER\PROJECTS\ANN ARBOR\ER19743\200-19743-21003\CAD\SHEETFILES\METERING\18_PFIZER_PANEL LAYOUT_WIR DIA.DWG - SHANK, JASON

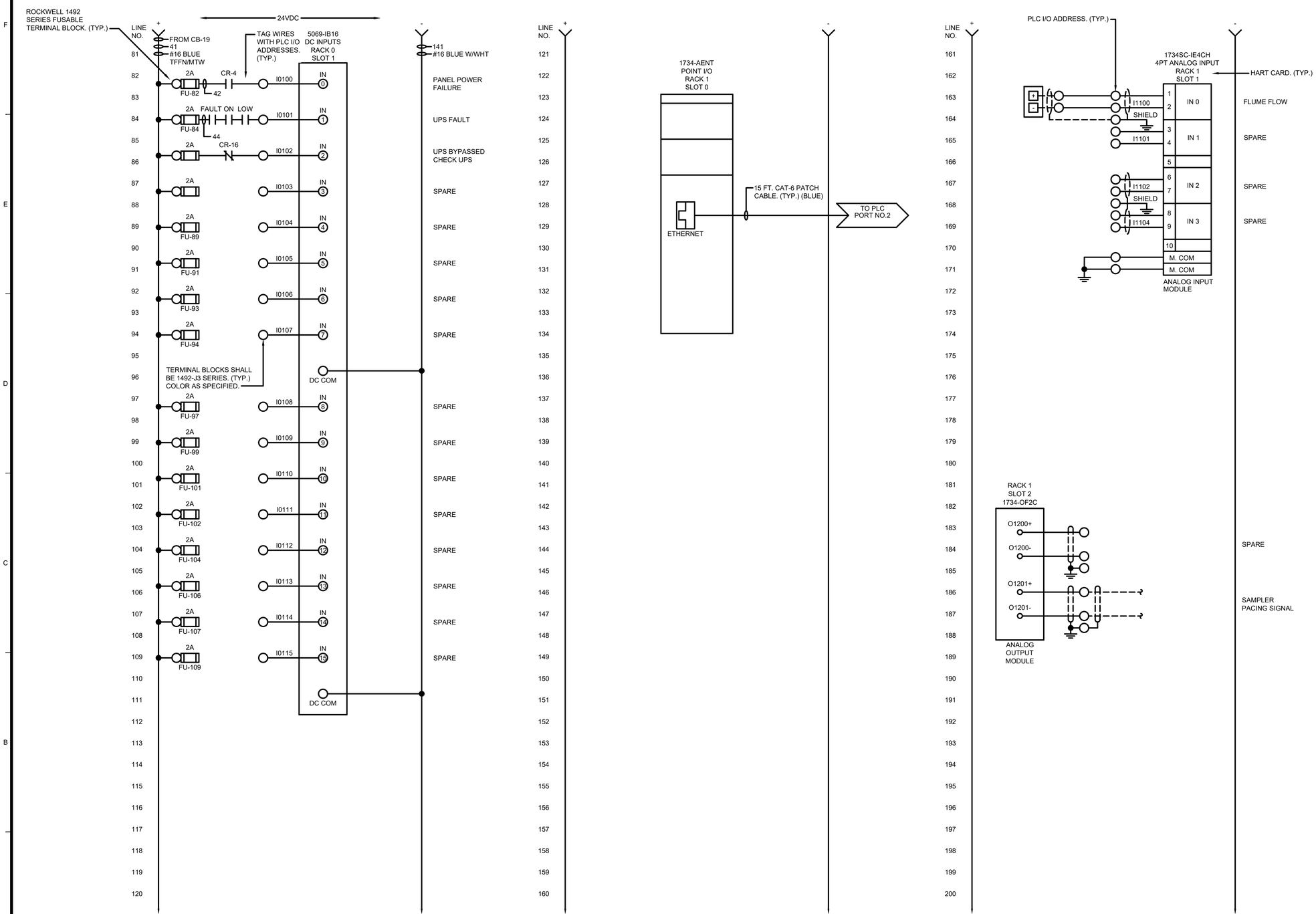

TETRA TECH

www.tetratech.com
710 AVIS DRIVE
ANN ARBOR, MI 48108
PHONE: (734) 665-6000 FAX: (734) 213-3003

MARK	DATE	DESCRIPTION	BY

CITY OF KALAMAZOO, MICHIGAN
METERING STATIONS CONTROL UPGRADES

PFIZER CONTROL PANEL WIRING DIAGRAM

Project No.:	200-19743-21003
Designed By:	GCJ
Drawn By:	JLS
Checked By:	MSJ/GCJ

Copyright: Tetra Tech

Bar Measures 1 inch

2/21/2022 3:12:49 PM - \\TT.LOCAL\ER\PROJECTS\ANN ARBOR\ER\19743\200-19743-21003\CAD\SHEETFILES\EMETERING\19_PFIZER_PANEL WIR DIA.DWG - SHANK, JASON

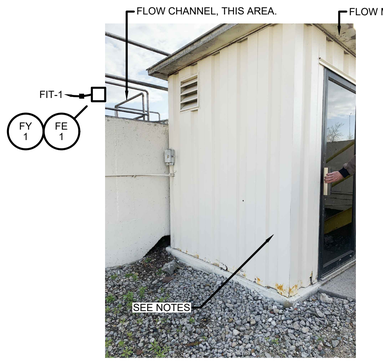

METERING CONTROL PANEL

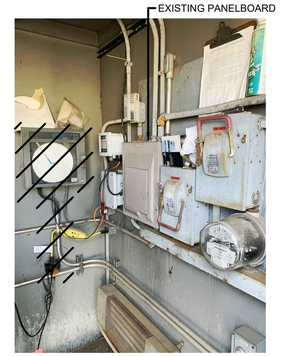

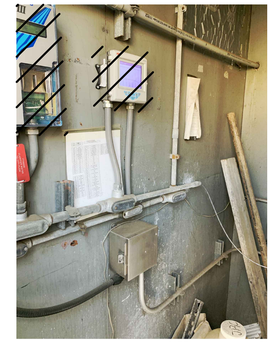

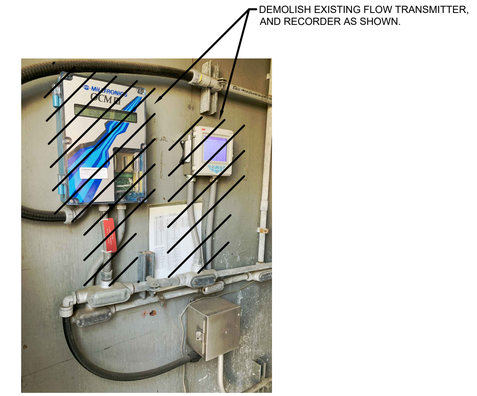

STATION PHOTOS

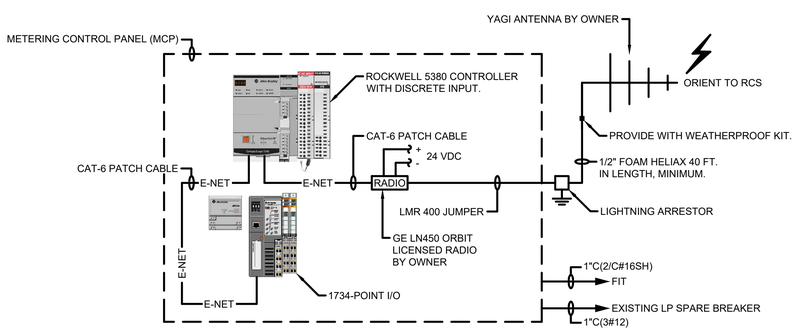

SYSTEM CONFIGURATION DRAWING

NOTE: PLC/RADIO'S PROGRAMMING BY OWNER/TETRATECH.

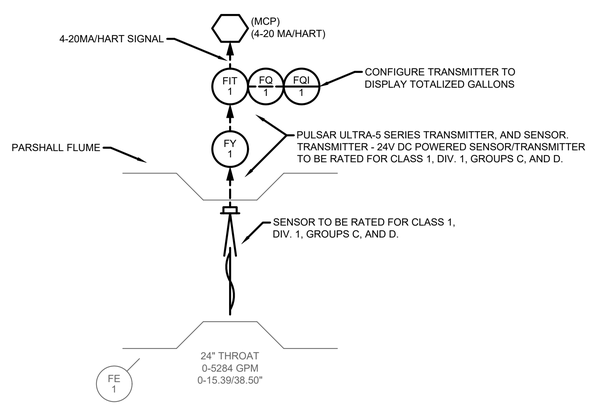

PARTIAL P&ID DIAGRAM

NOTES:

1. INSTALL NEW MCP OUTSIDE EXISTING FLOW METERING SHED. PROVIDE A 1 INCH CONDUIT WITH 3#12 WIRES AND POWER FROM EXISTING PANELBOARD. LABEL SPARE BREAKER IN EXISTING PANELBOARD WITH NEW MCP DESIGNATION.
2. MOUNT THE NEW PULSAR FLOW TRANSMITTER INSIDE THE EXISTING SHED. POWER FROM 24VDC POWER SUPPLY IN NEW MCP.
3. INSTALL A 2 - 1 INCH CONDUITS WITH 3#12 WIRES AND 2/C#18SH CABLE TO THE NEW MCP FROM NEW FLOW TRANSMITTER.
4. FROM THE NEW MCP, INSTALL THE ½ INCH COAXIAL CABLE TO THE NEW YAGI ANTENNA. LOCATE NEW ANTENNA ON A 24 FOOT LONG 2 INCH SCHEDULE 40 ALUMINUM MAST PIPE MOUNTED ON CONCRETE WALL NEAR EXISTING OUTDOOR METERING SHED. GROUND MAST PIPE WITH N0.6 AWG RHW-USE WIRE. INSTALL TWO GROUND RODS IN YARD AREA NEAR EXISTING FLOW MONITORING BUILDING AND EXTERIOR MOUNTED MCP. CONNECT NO.6 WIRE TO GROUNDS RODS.
5. OBTAIN THE SERVICES OF OUDBIER CALIBRATION SERVICES TO SET UP THE TRANSMITTER, CALIBRATE AND PLACE ON-LINE.
6. INSTALL THE NEW FLOW SENSOR IN PLACE OF THE EXISTING MILLETRONICS SENSOR. TURN OVER EXISTING FLOW TRANSMITTER AND SENSOR TO OWNER. INSTALL NEW 1 INCH CONDUIT BETWEEN METERING BUILDING AND FLOW SENSOR. ASSUME FOR 75 FEET OF 2" PVC-RMC CONDUIT AND MFR. CABLE TO BE INSTALLED. FLOW SENSOR IS IN A NEMA 7 AREA. PROVIDE SEAL FITTINGS AS REQUIRED ON THIS CONDUIT. PROVIDE NEW STAINLESS STEEL MOUNTING HARDWARE FOR INSTALLING SENSOR OVER EXISTING FLUME. FIELD VERIFY CONDUIT ROUTING, AND PAVEMENT CUTTING AND PATCHING PRIOR TO BIDS. PATCH BACK TO ORIGINAL CONDITION.

TETRA TECH
www.tetratech.com
710 AVIS DRIVE
ANN ARBOR, MI 48108
PHONE: (734) 665-6000 FAX: (734) 213-3003

MARK	DATE	DESCRIPTION	BY

CITY OF KALAMAZOO, MICHIGAN
METERING STATIONS CONTROL UPGRADES

GRAPHICS PACKAGING
METERING STATION
ONE-LINES, DETAILS

Project No.:	200-19743-21003
Designed By:	GCJ
Drawn By:	JLS
Checked By:	MSJ/GCJ

Copyright: Tetra Tech

Bar Measures 1 inch

4/27/2022 12:47:49 PM - \\TT.LOCAL\IER\PROJECTS\ANN ARBOR\IER\197430200-19743-21003\CAD\SHEETFILES\METERING\20_GRAPHICS PACKAGING_ONELINE_DETAILS.DWG - SHANK, JASON

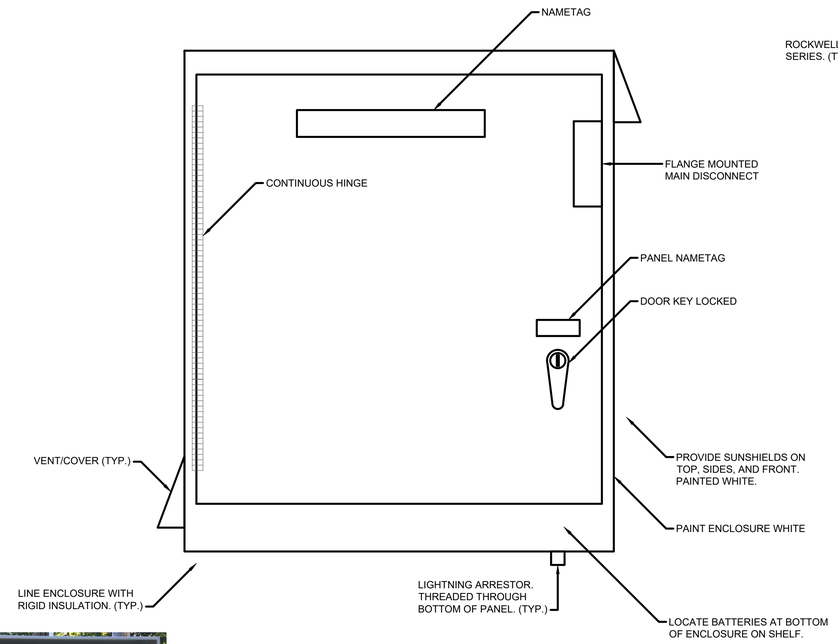

METERING STATION CONTROL PANEL LAYOUT

NEMA 4 ENCLOSURE
SIZE: 42"H X 36"W X12"D (MIN.)
PANEL TO BE CONSTRUCTED BY A UL LISTED PANEL SHOP.

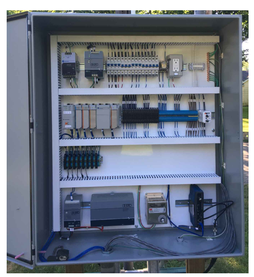

SAMPLE METERING PANEL LAYOUT

NO SCALE

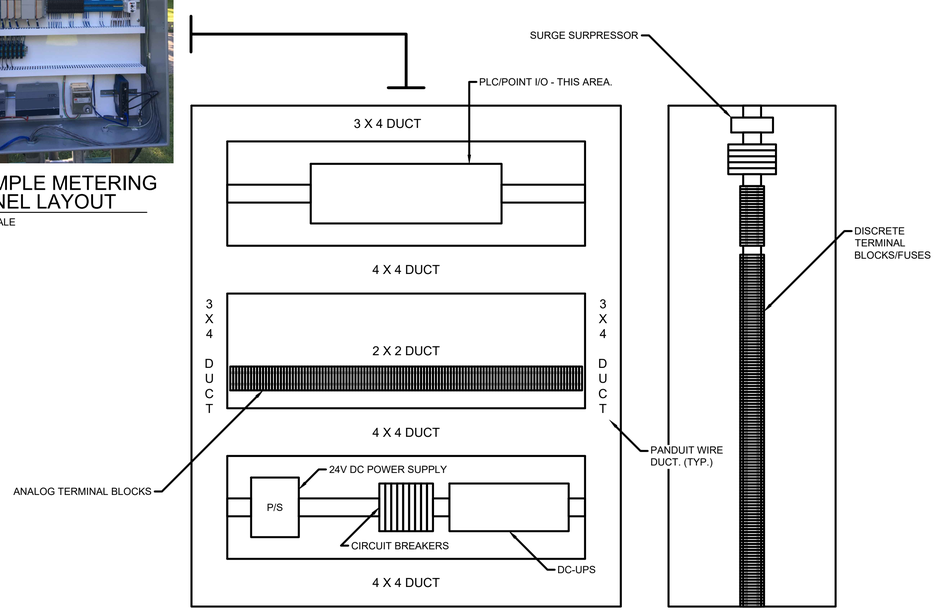

GENERAL SUBPLATE LAYOUT

PAINT INSIDE: GLOSS WHITE.
NOTE: NOT ALL SUBPLATE DEVICES ARE SHOWN.
SEE WIRING DIAGRAMS FOR ADDITIONAL REQUIREMENTS. (TYP.)

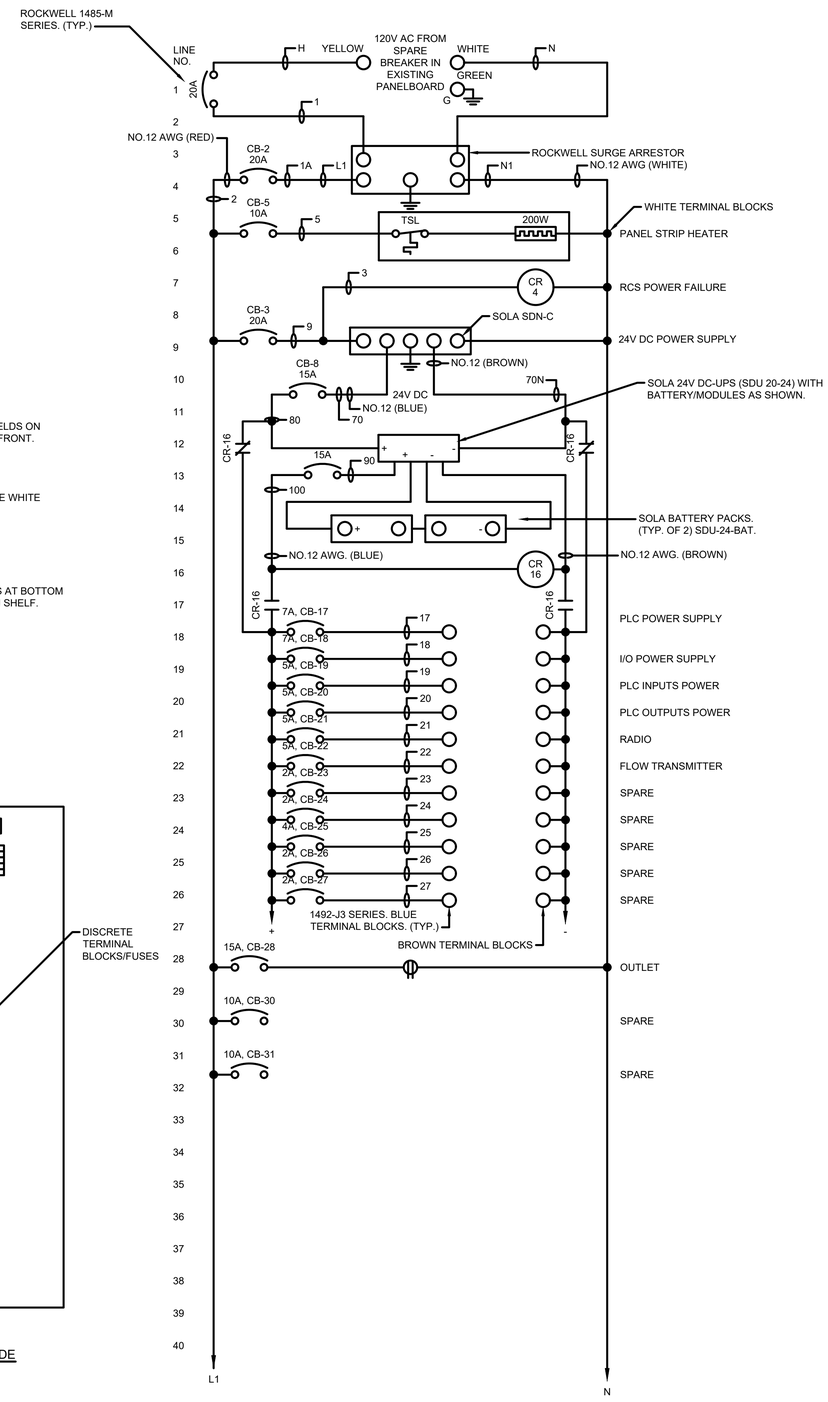

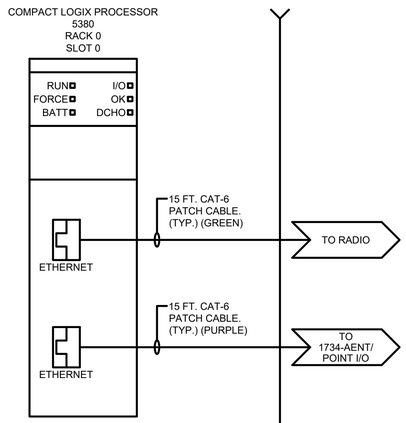

TETRA TECH
www.tetratech.com
710 AVIS DRIVE
ANN ARBOR, MI 48108
PHONE: (734) 665-6000 FAX: (734) 213-3003

MARK	DATE	DESCRIPTION	BY

CITY OF KALAMAZOO, MICHIGAN
METERING STATIONS CONTROL UPGRADES

GRAPHICS PACKAGING CONTROL PANEL LAYOUT, WIRING DIAGRAM

Project No.:	200-19743-21003
Designed By:	GCJ
Drawn By:	JLS
Checked By:	MSJ/GCJ

Copyright: Tetra Tech

Bar Measures 1 inch

4/27/2022 12:48:44 PM - \\TT.LOCAL\ER\PROJECTS\ANN ARBOR\ER19743\200-19743-21003\CAD\SHEETFILES\EMETERING\21_GRAPHICS PACKAGING_PANEL LAYOUT_WIR DIA.DWG - SHANK, JASON

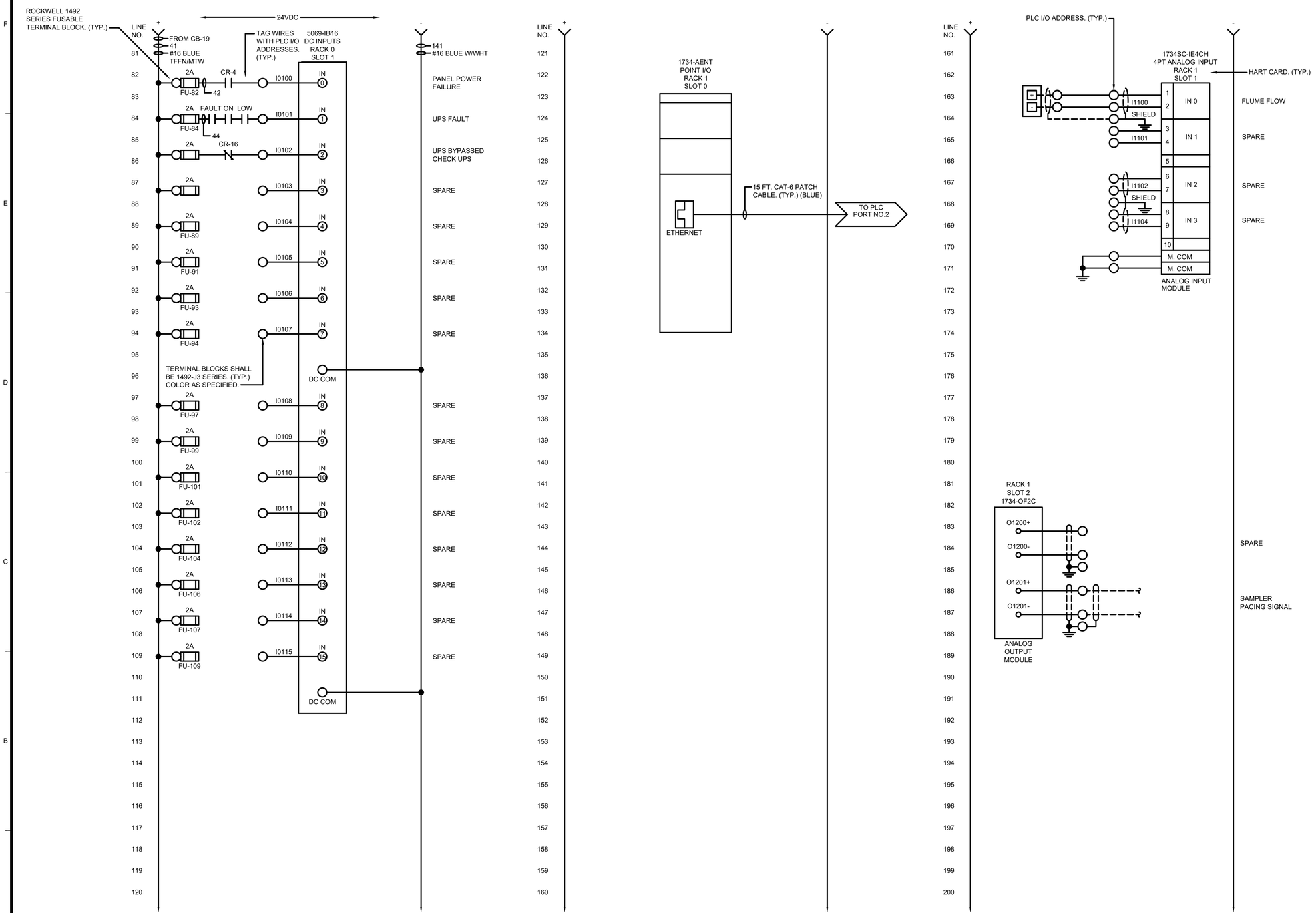

TETRA TECH

www.tetratech.com
710 AVIS DRIVE
ANN ARBOR, MI 48108
PHONE: (734) 665-6000 FAX: (734) 213-3003

MARK	DATE	DESCRIPTION	BY

CITY OF KALAMAZOO, MICHIGAN
METERING STATIONS CONTROL UPGRADES

GRAPHICS PACKAGING CONTROL PANEL WIRING DIAGRAM

Project No.:	200-19743-21003
Designed By:	GCJ
Drawn By:	JLS
Checked By:	MSJ/GCJ

22
OF 40

Copyright: Tetra Tech

Bar Measures 1 inch

2/21/2022 3:13:18 PM - \\TT.LOCAL\IER\PROJECTS\ANN ARBOR\IER\19743\200-19743-21003\CAD\SHEETFILES\E\METERING\22_GRAPHICS PACKAGING_PANEL WIR DIA.DWG - SHANK, JASON

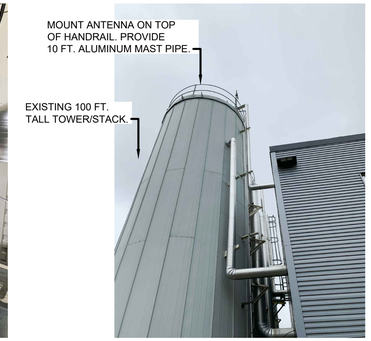

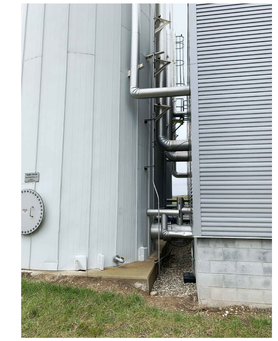

STATION PHOTOS

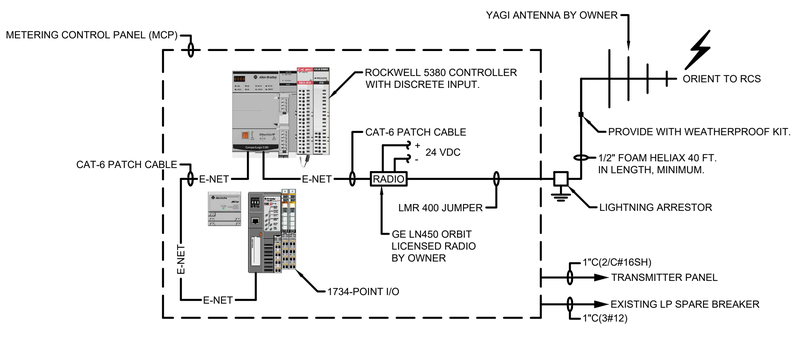

SYSTEM CONFIGURATION DRAWING

NOTE: PLC/RADIO PROGRAMMING BY OWNER/TETRATECH.

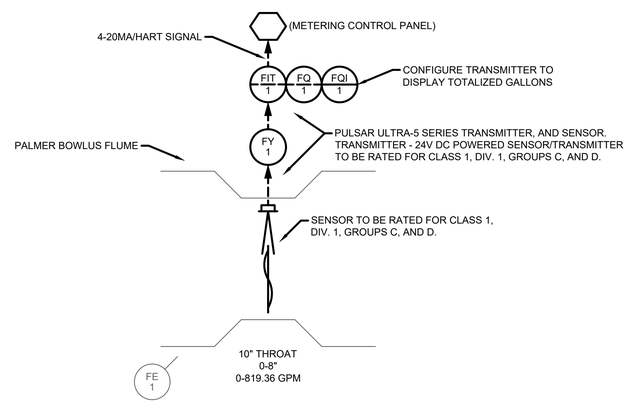

PARTIAL P&ID DIAGRAM

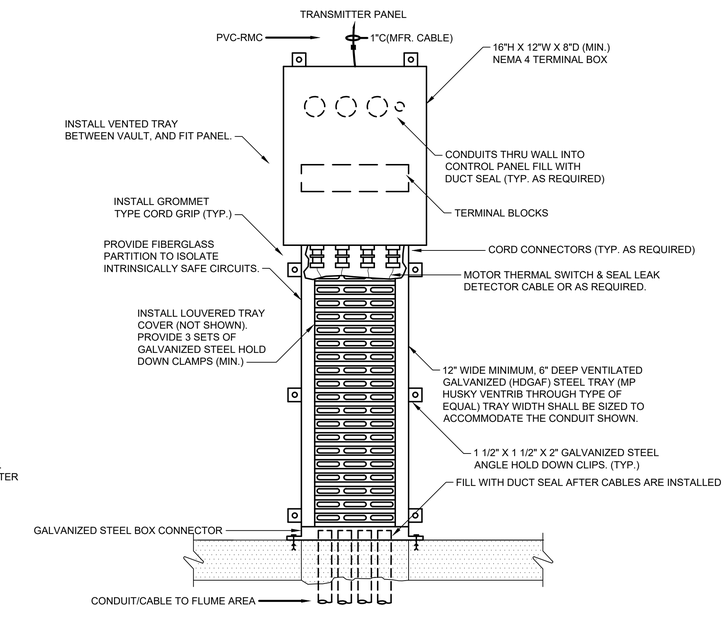

VENTED TRAY DETAIL

PARSHALL FLUME

NOTES:

1. INSTALL NEW MCP OUTSIDE EXISTING FLOW METERING SHED. PROVIDE A 1 INCH CONDUIT WITH 3#12 WIRES AND POWER FROM EXISTING PANELBOARD. LABEL SPARE BREAKER IN PANELBOARD WITH NEW MCP DESIGNATION. ASSUME FOR 100 FT. OF PVC-RMC CONDUIT TO BE INSTALLED TO EXISTING PANELBOARD.
2. MOUNT THE NEW PULSAR FLOW TRANSMITTER INSIDE THE EXISTING METERING CABINET. POWER FROM 24VDC POWER SUPPLY IN NEW MCP.
3. INSTALL 2 - 1 INCH PVC-RMC CONDUITS WITH 3#12 WIRES, AND 2/C#18SH CABLE TO THE NEW MCP, FROM THE NEW FLOW TRANSMITTER. ASSUME DISTANCE OF 75 FT. FOR EACH CONDUIT.
4. FROM THE NEW MCP, INSTALL THE ½ INCH COAXIAL CABLE TO THE NEW YAGI ANTENNA. LOCATE NEW ANTENNA ON A NEW 10 FOOT LONG 2 INCH SCHEDULE 40 ALUMINUM MAST PIPE MOUNTED ON THE HANDRAIL ON TOP OF THE EXISTING OUTDOOR STORAGE TANKS. GROUND MAST PIPE WITH N0.6 AWG RHW-USE WIRE. INSTALL TWO GROUND RODS IN YARD AREA NEAR EXISTING FLOW MONITORING BUILDING AND EXTERIOR MOUNTED MCP. CONNECT NO.6 WIRE TO GROUNDS RODS.
5. OBTAIN THE SERVICES OF OUDBIER CALIBRATION SERVICES TO SET UP THE TRANSMITTER, CALIBRATE AND PLACE ON-LINE.

TETRA TECH
www.tetratech.com
710 AVIS DRIVE
ANN ARBOR, MI 48108
PHONE: (734) 665-6000 FAX: (734) 213-3003

MARK	DATE	DESCRIPTION	BY

CITY OF KALAMAZOO, MICHIGAN
METERING STATIONS CONTROL UPGRADES

BELLS BREWERY
METERING STATION
ONE-LINES, DETAILS

Project No.:	200-19743-21003
Designed By:	GCJ
Drawn By:	JLS
Checked By:	MSJ/GCJ

Copyright: Tetra Tech

Bar Measures 1 inch

4/27/2022 12:50:47 PM - \\TT.LOCAL\ER\PROJECTS\ANN ARBOR\ER19743\200-19743-21003\CAD\SHEETFILES\METERING\23_BELLS BREWERY_ONELINE_DETAILS.DWG - SHANK, JASON

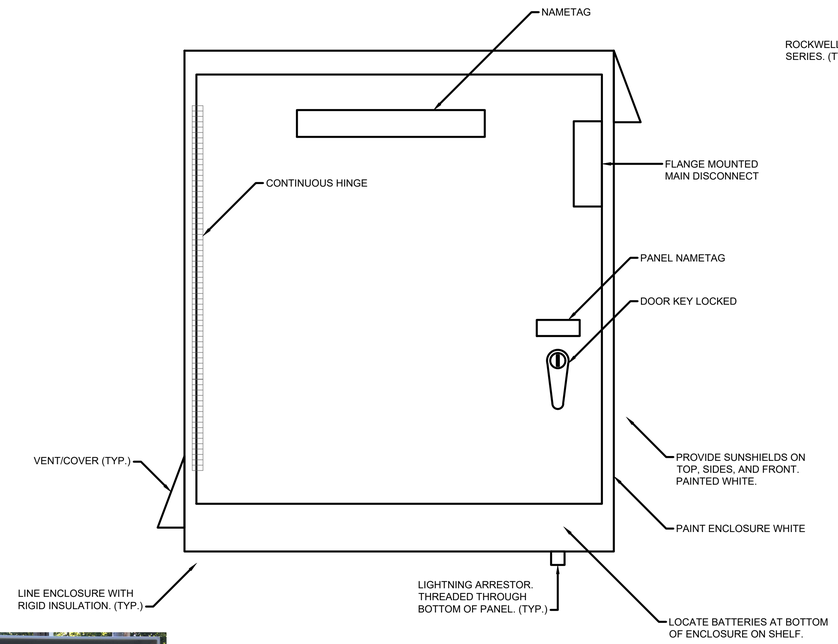

METERING STATION CONTROL PANEL LAYOUT

NEMA 4 ENCLOSURE
SIZE: 42"H X 36"W X12"D (MIN.)
PANEL TO BE CONSTRUCTED BY A UL LISTED PANEL SHOP.

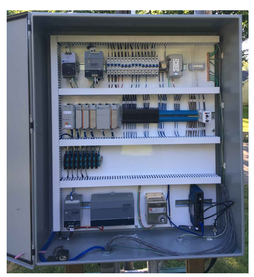

SAMPLE METERING PANEL LAYOUT

NO SCALE

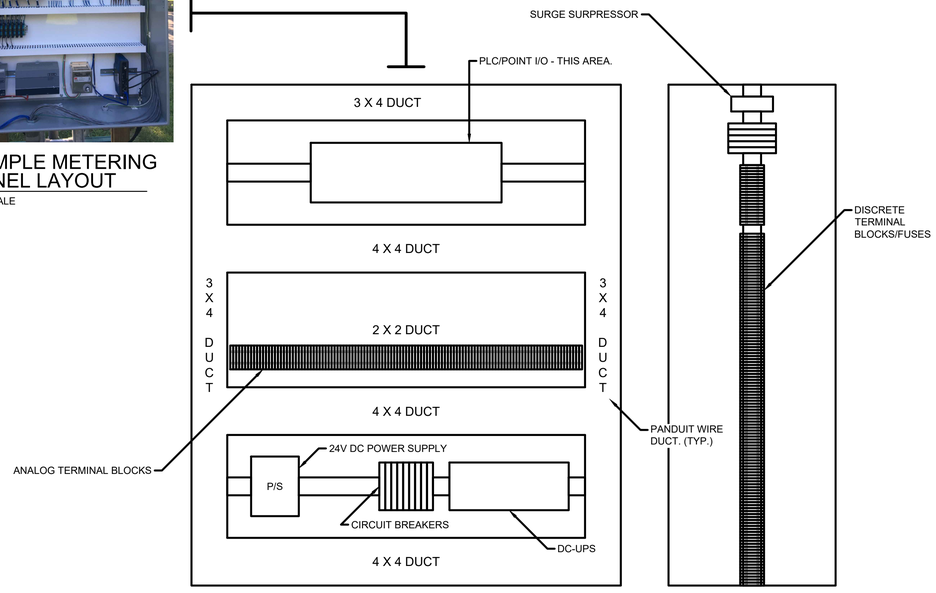

GENERAL SUBPLATE LAYOUT

PAINT INSIDE: GLOSS WHITE.
NOTE: NOT ALL SUBPLATE DEVICES ARE SHOWN.
SEE WIRING DIAGRAMS FOR ADDITIONAL REQUIREMENTS. (TYP.)

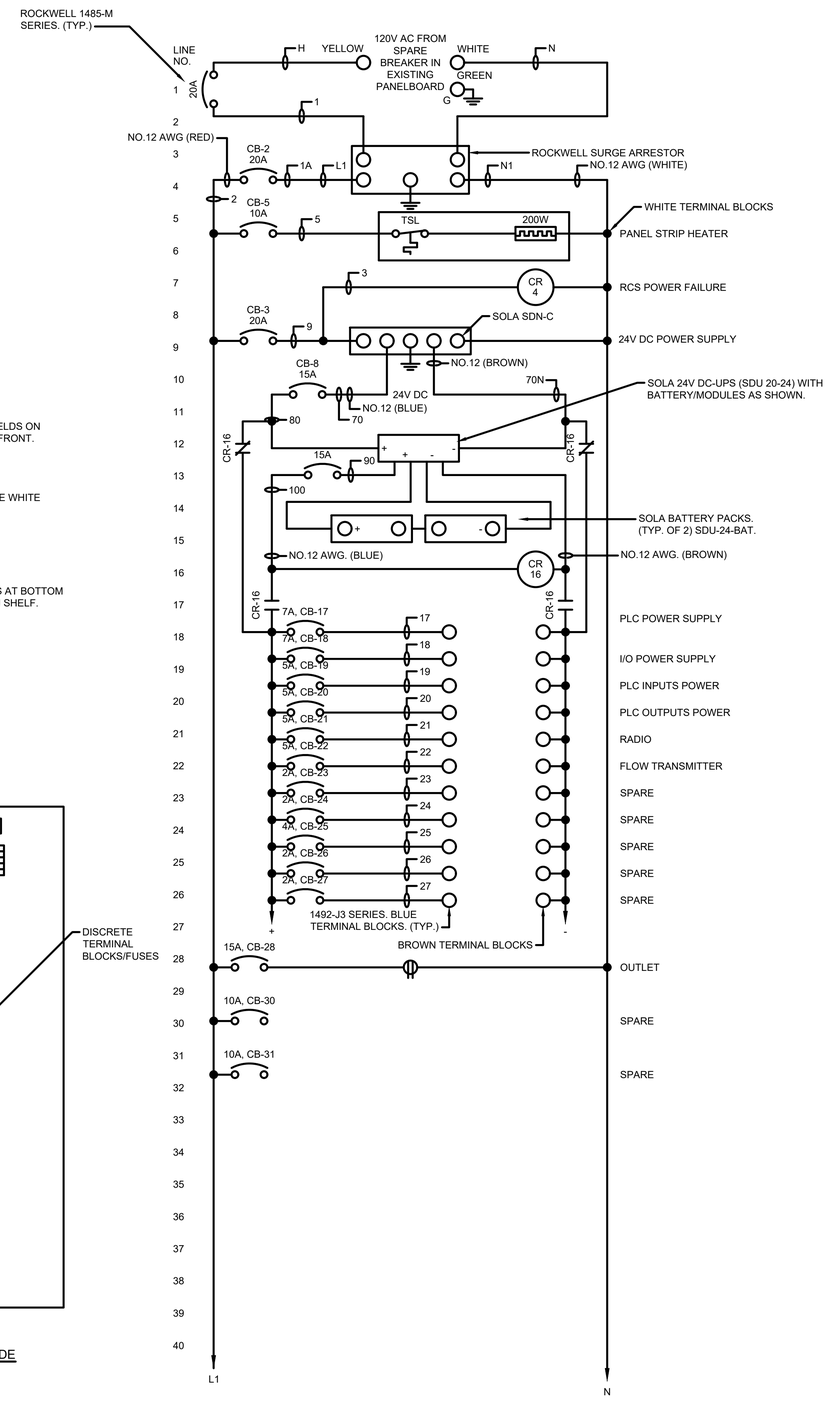

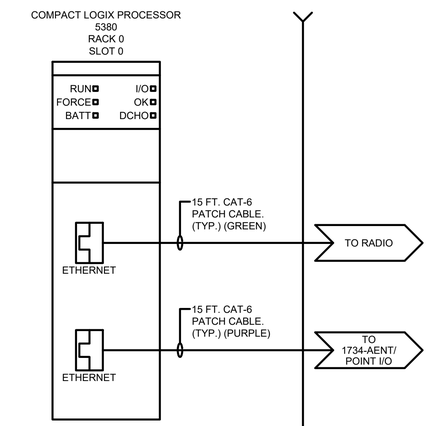

TETRA TECH
www.tetratech.com
710 AVIS DRIVE
ANN ARBOR, MI 48108
PHONE: (734) 665-6000 FAX: (734) 213-3003

MARK	DATE	DESCRIPTION	BY

CITY OF KALAMAZOO, MICHIGAN
METERING STATIONS CONTROL UPGRADES

BELLS BREWERY CONTROL PANEL LAYOUT, WIRING DIAGRAM

Project No.:	200-19743-21003
Designed By:	GCJ
Drawn By:	JLS
Checked By:	MSJ/GCJ

Copyright: Tetra Tech

Bar Measures 1 inch

4/27/2022 12:51:47 PM - \\TT.LOCAL\ER\PROJECTS\ANN ARBOR\ER19743\200-19743-21003\CAD\SHEETFILES\EMETERING\24_BELLS BREWERY_PANEL LAYOUT_WIR DIA.DWG - SHANK, JASON

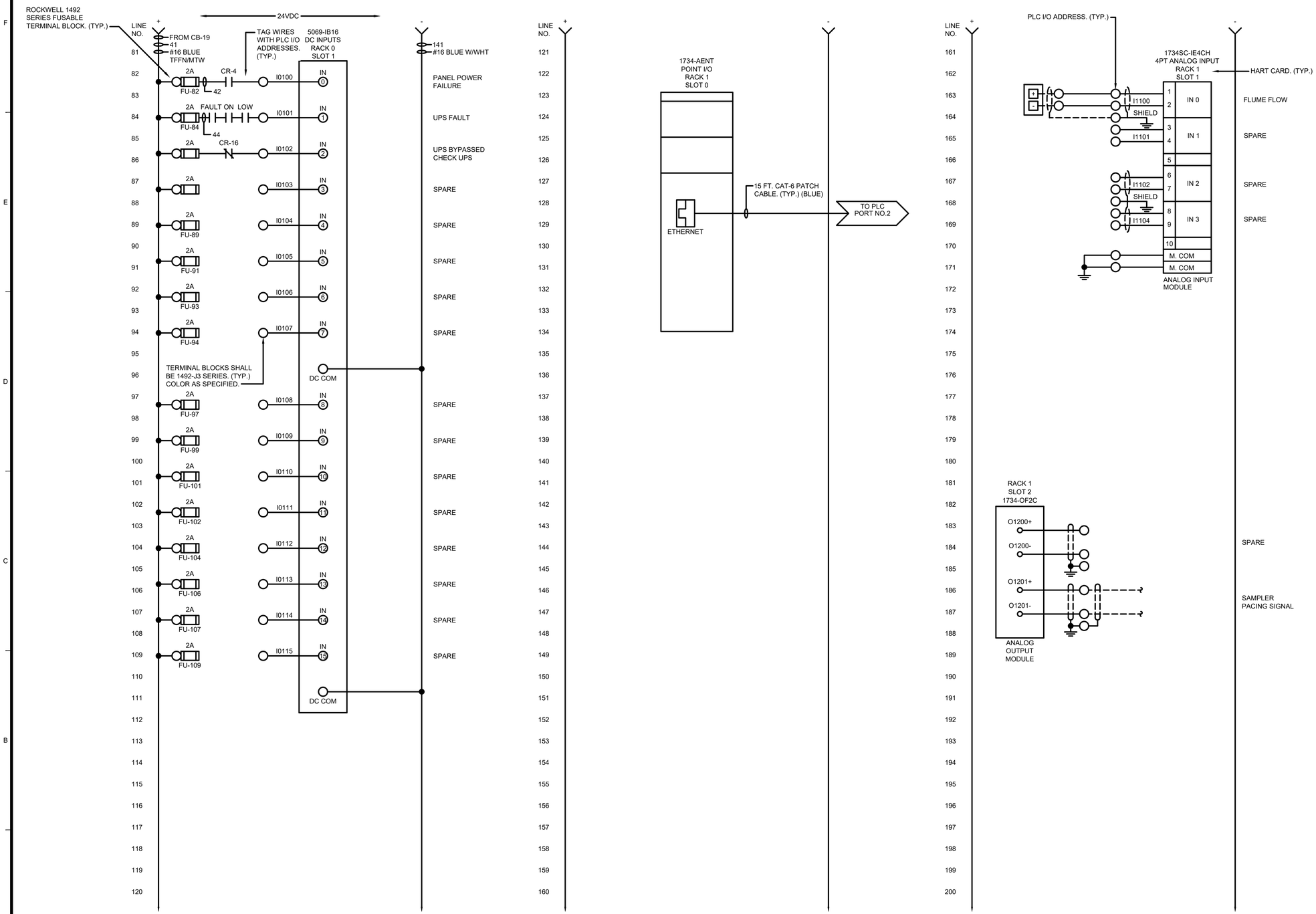

TETRA TECH

www.tetratech.com
710 AVIS DRIVE
ANN ARBOR, MI 48108
PHONE: (734) 665-6000 FAX: (734) 213-3003

MARK	DATE	DESCRIPTION	BY

CITY OF KALAMAZOO, MICHIGAN
METERING STATIONS CONTROL UPGRADES

BELLS BREWERY CONTROL PANEL WIRING DIAGRAM

Project No.:	200-19743-21003
Designed By:	GCJ
Drawn By:	JLS
Checked By:	MSJ/GCJ

Copyright: Tetra Tech

Bar Measures 1 inch

2/21/2022 3:13:48 PM - \\TT.LOCAL\ER\PROJECTS\ANN ARBOR\ER\19743\200-19743-21003\CAD\SHEETFILES\EMETERING\25_BELLS BREWERY_PANEL WIR DIA.DWG - SHANK, JASON

STATION PHOTOS

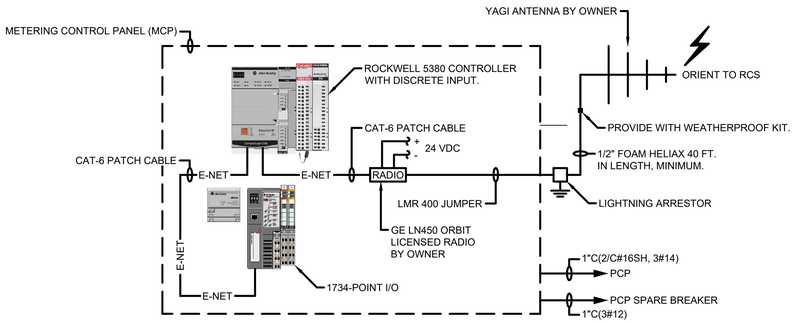

SYSTEM CONFIGURATION DRAWING

NOTE: PLC/RADIO PROGRAMMING BY OWNER/TETRATECH.

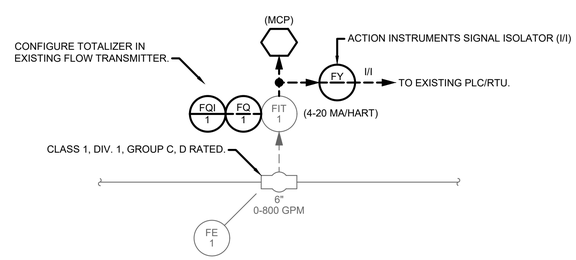

PARTIAL P&ID DIAGRAM

NOTES:

1. INSTALL NEW MCP OUTSIDE NEAR EXISTING OUTDOOR EQUIPMENT/PANEL. PROVIDE NEW 316 STAINLESS STEEL STRUT AND MOUNT NEW PANEL. PROVIDE A 1 INCH CONDUIT WITH 3#12 WIRES AND POWER FROM EXISTING PANELBOARD. LABEL SPARE BREAKER IN PANELBOARD WITH NEW MCP DESIGNATION.
2. INSTALL A 1 INCH CONDUIT WITH 2/C#18SH CABLE TO THE NEW MCP FROM THE EXISTING MAGNETIC FLOW TRANSMITTER INSIDE THE EXISTING CONTROL PANEL.
3. FROM THE NEW MCP, INSTALL THE ½ INCH COAXIAL CABLE TO THE NEW YAGI ANTENNA. LOCATE NEW ANTENNA ON A NEW 24 FOOT LONG 2 INCH SCHEDULE 40 ALUMINUM MAST PIPE MOUNTED ON THE BACKSIDE OF THE EXISTING PANEL ON A NEW STRUT RACK. GROUND MAST PIPE WITH NO.6 AWG RHW-USE WIRE. INSTALL TWO GROUND RODS IN YARD AREA NEAR EXISTING STRUT SUPPORT RACK. CONNECT NO.6 WIRE TO GROUNDS RODS
4. OBTAIN THE SERVICES OF OUDBIER CALIBRATION SERVICES TO SET UP THE TRANSMITTER, CALIBRATE AND PLACE ON-LINE.
5. INSTALL A SIGNAL ISOLATOR (I/I) TO FEED THE EXISTING 4-20 MA FLOW SIGNAL TO THE NEW MCP, AND THEN RE-TRANSMIT TO EXISTING PLC/RTU.

TETRA TECH
www.tetratech.com
710 AVIS DRIVE
ANN ARBOR, MI 48108
PHONE: (734) 665-6000 FAX: (734) 213-3003

MARK	DATE	DESCRIPTION	BY

CITY OF KALAMAZOO, MICHIGAN
METERING STATIONS CONTROL UPGRADES

COOPER
METERING STATION
ONE-LINES, DETAILS

Project No.:	200-19743-21003
Designed By:	GCJ
Drawn By:	JLS
Checked By:	MSJ/GCJ

Copyright: Tetra Tech

Bar Measures 1 inch

4/27/2022 12:54:16 PM - \\TT.LOCAL\IER\PROJECTS\ANN ARBOR\IER\197432\200-19743-21003\CAD\SHEETFILES\METERING\26_COOPER_ONELINE_DETAILS.DWG - SHANK, JASON

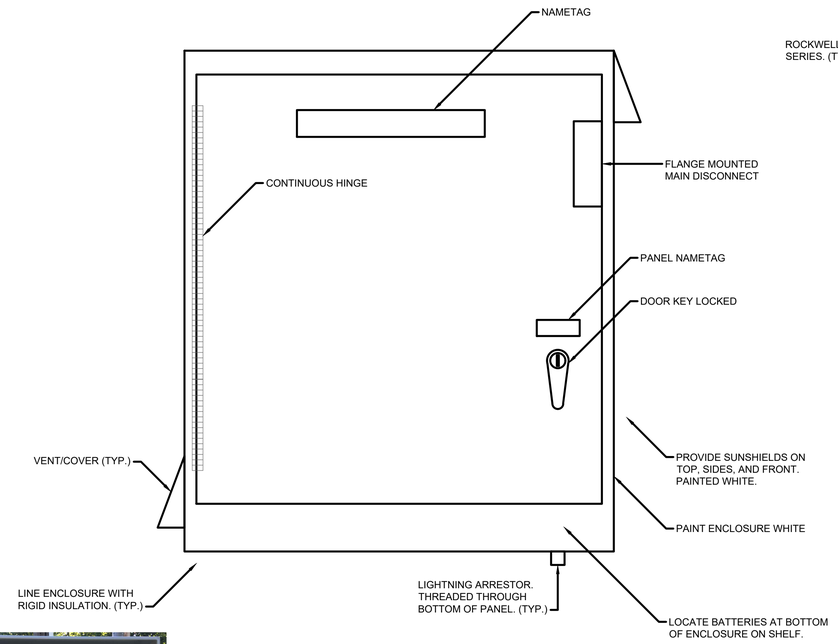

METERING STATION CONTROL PANEL LAYOUT

NEMA 4 ENCLOSURE
SIZE: 42"H X 36"W X12"D (MIN.)
PANEL TO BE CONSTRUCTED BY A UL LISTED PANEL SHOP.

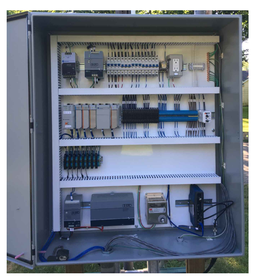

SAMPLE METERING PANEL LAYOUT

NO SCALE

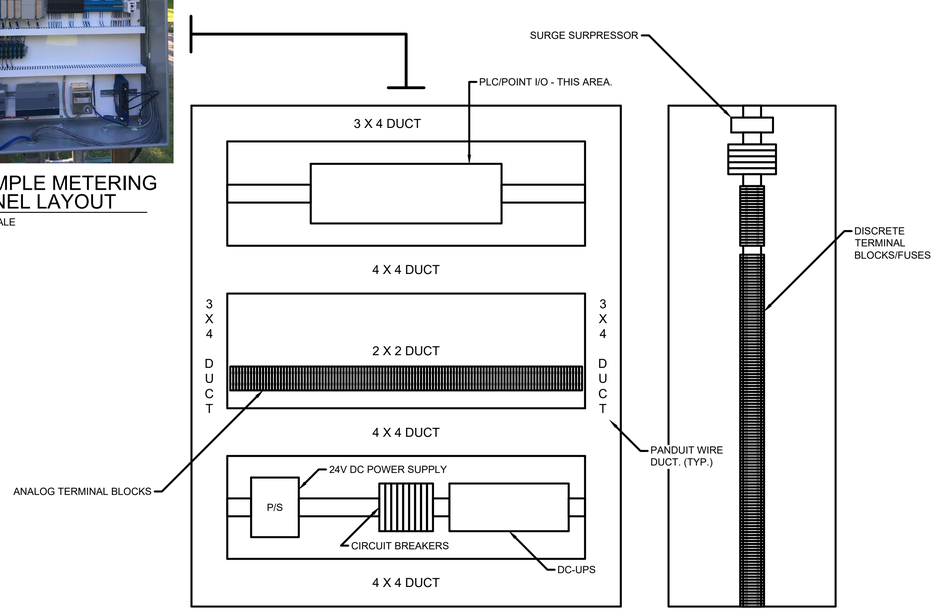

GENERAL SUBPLATE LAYOUT

PAINT INSIDE: GLOSS WHITE.
NOTE: NOT ALL SUBPLATE DEVICES ARE SHOWN.
SEE WIRING DIAGRAMS FOR ADDITIONAL REQUIREMENTS. (TYP.)

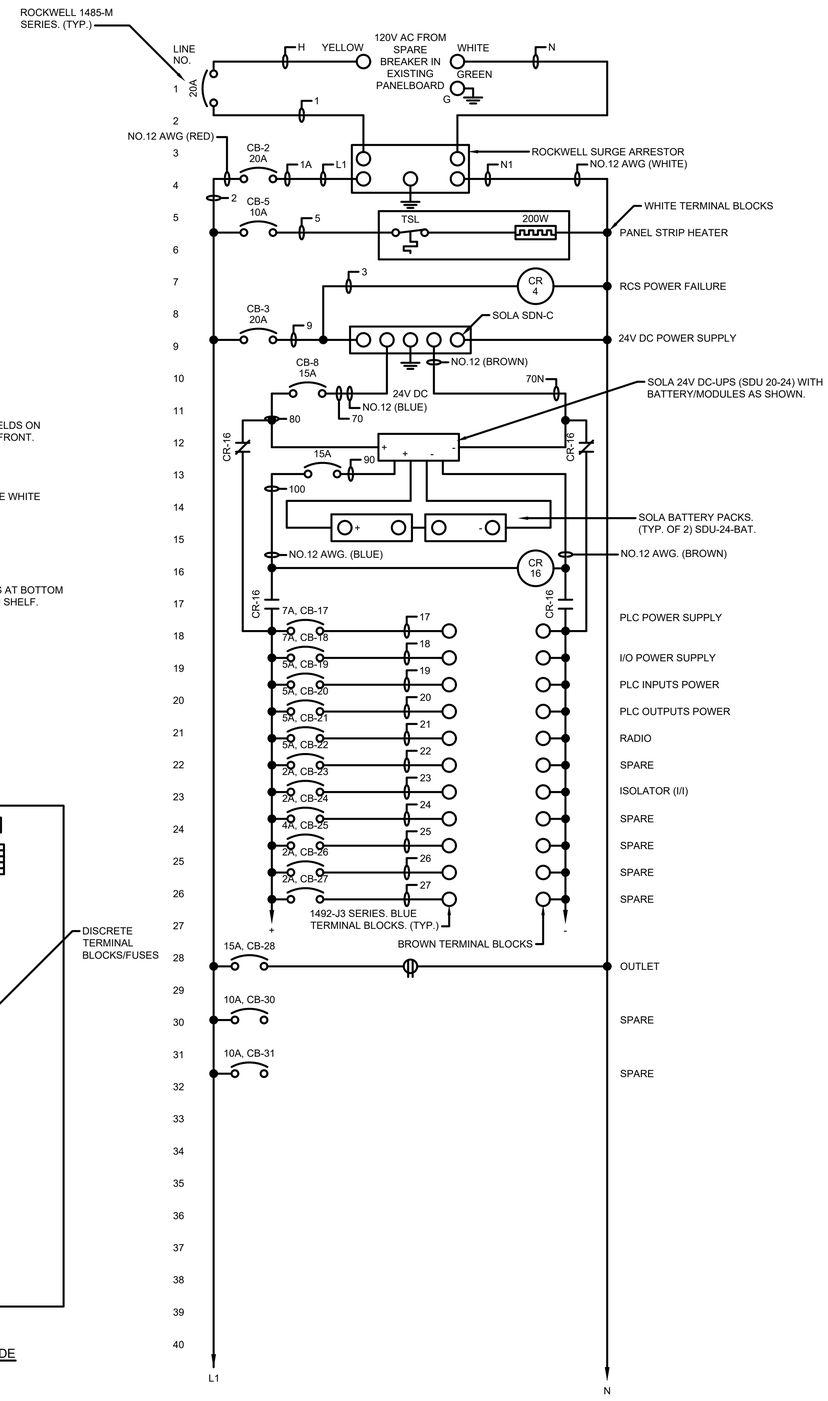

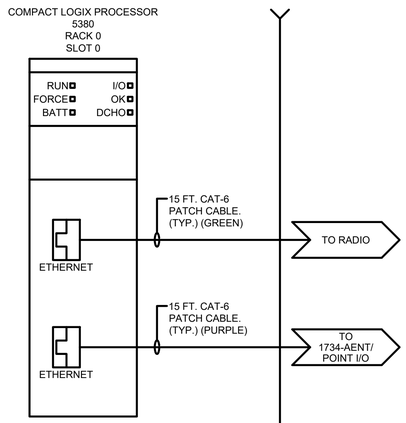

TETRA TECH
www.tetratech.com
710 AVIS DRIVE
ANN ARBOR, MI 48108
PHONE: (734) 665-6000 FAX: (734) 213-3003

MARK	DATE	DESCRIPTION	BY

CITY OF KALAMAZOO, MICHIGAN
METERING STATIONS CONTROL UPGRADES

COOPER CONTROL PANEL LAYOUT, WIRING DIAGRAM

Project No.:	200-19743-21003
Designed By:	GCJ
Drawn By:	JLS
Checked By:	MSJ/GCJ

Copyright: Tetra Tech

Bar Measures 1 inch

4/27/2022 12:57:58 PM - \\TT.LOCAL\ER\PROJECTS\ANN ARBOR\ER19743\200-19743-21003\CAD\SHEETFILES\EMETERING\27_COOPER_PANEL LAYOUT_WIR DIA.DWG - SHANK, JASON

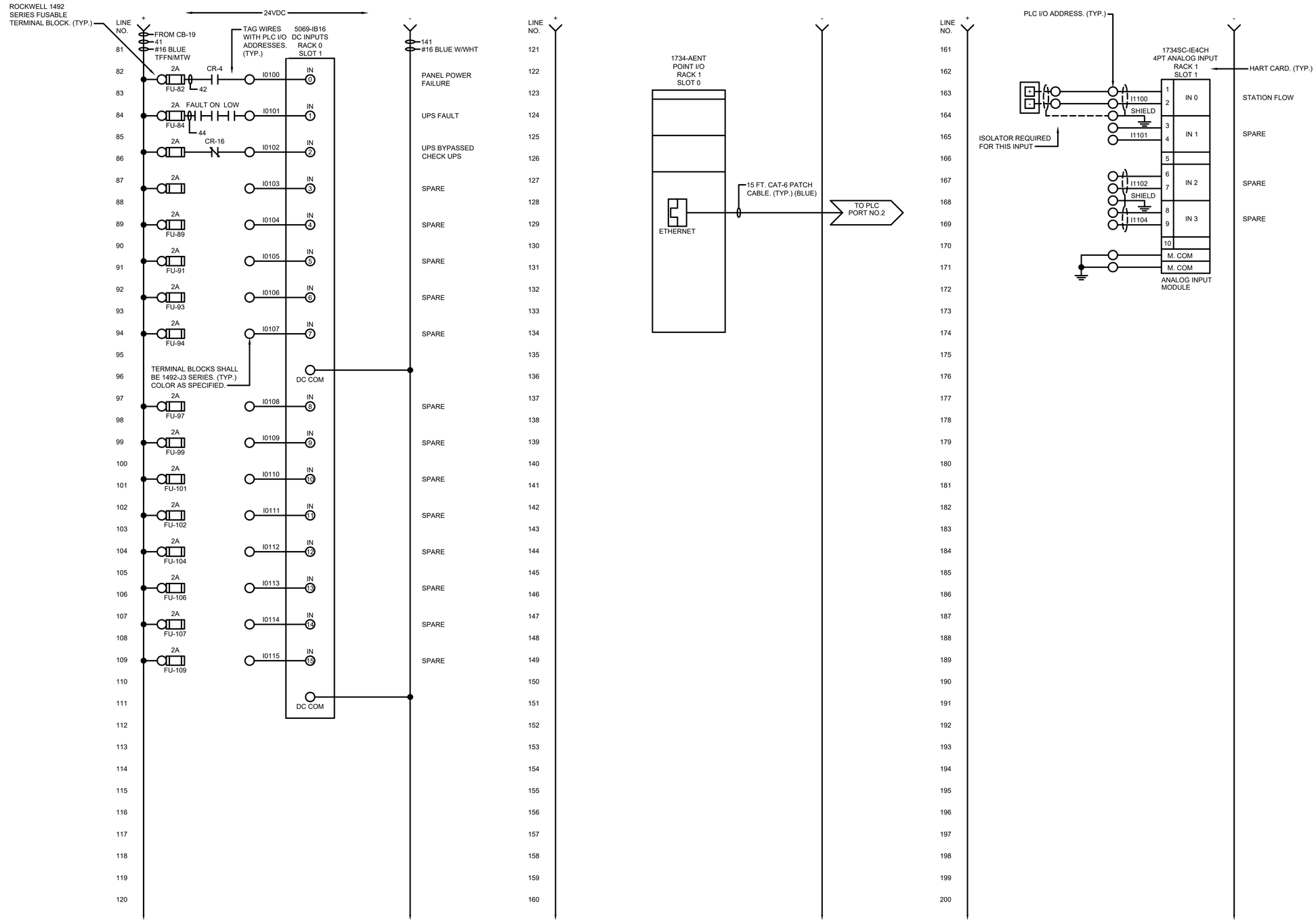

TETRA TECH

www.tetratech.com
710 AVIS DRIVE
ANN ARBOR, MI 48108
PHONE: (734) 665-6000 FAX: (734) 213-3003

MARK	DATE	DESCRIPTION	BY

CITY OF KALAMAZOO, MICHIGAN
METERING STATIONS CONTROL UPGRADES

COOPER CONTROL PANEL WIRING DIAGRAM

Project No.:	200-19743-21003
Designed By:	GCJ
Drawn By:	JLS
Checked By:	MSJ/GCJ

Copyright: Tetra Tech

Bar Measures 1 inch

4/27/2022 12:59:26 PM - \\TT.LOCAL\IER\PROJECTS\ANN ARBOR\IER\19743\200-19743-21003\CAD\SHEETFILES\E\METERING\28_COOPER_PANEL WIR DIA.DWG - SHANK, JASON

STATION PHOTOS

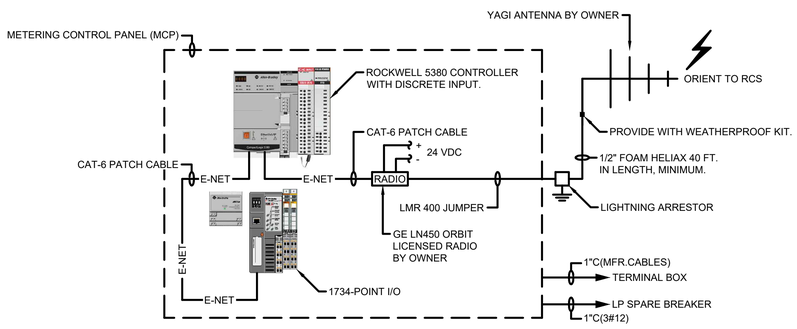

SYSTEM CONFIGURATION DRAWING

NOTE: PLC/RADIO PROGRAMMING BY OWNER/TETRATECH.

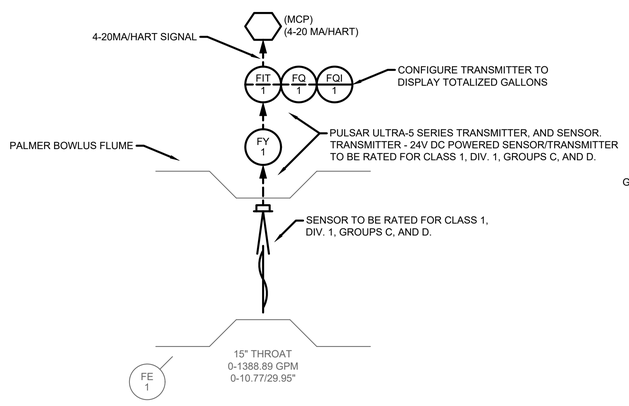

PARTIAL P&ID DIAGRAM

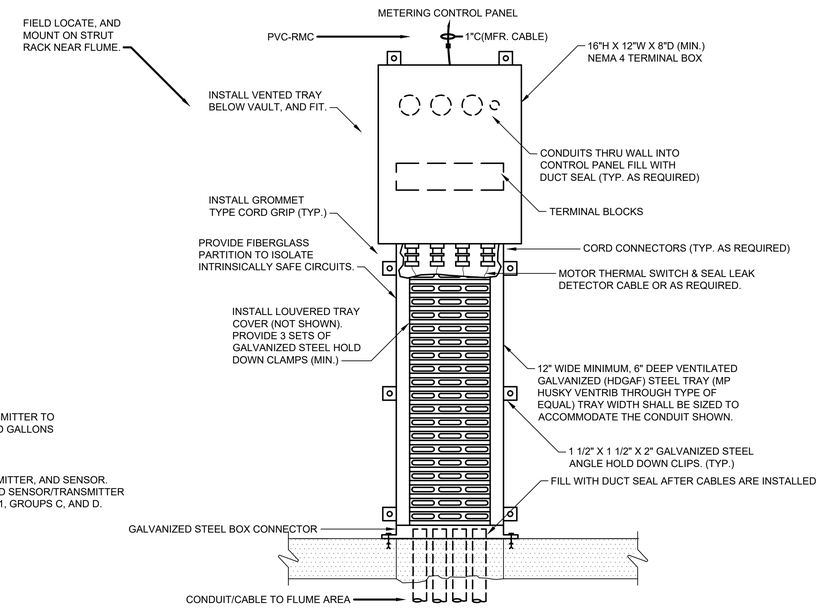

VENTED TRAY DETAIL

PARSHALL FLUME

NOTES:

1. INSTALL NEW MCP ON NEW STRUT RACK BESIDE EXISTING FLOW METERING PANEL. PROVIDE A 1 INCH CONDUIT WITH 3#12 WIRES AND POWER FROM EXISTING PANELBOARD. LABEL SPARE BREAKER IN PANELBOARD WITH NEW MCP DESIGNATION.
2. MOUNT THE NEW PULSAR FLOW TRANSMITTER INSIDE THE NEW METERING CABINET. POWER FROM 24VDC POWER SUPPLY IN NEW MCP.
3. FROM THE NEW MCP, INSTALL THE ½ INCH COAXIAL CABLE TO THE NEW YAGI ANTENNA. LOCATE NEW ANTENNA ON A NEW 8 FOOT LONG 2 INCH SCHEDULE 80 MAST PIPE MOUNTED ON THE BACKSIDE OF THE NEW STRUT RACK THAT SUPPORTS THE NEW FLOW MONITORING PANEL. GROUND MAST PIPE WITH N0.6 AWG RHW-USE WIRE. INSTALL TWO GROUND RODS IN YARD AREA NEAR EXISTING POWER POLE. CONNECT NO.6 WIRE TO GROUNDS RODS. LOCATE MAST PIPE AWAY FROM EXISTING POWER LINES.
4. SUPPORT PANEL WITH A NEW STRUT RACK, CONCRETE ENCASED.
5. OBTAIN THE SERVICES OF OUDBIER CALIBRATION SERVICES TO SET UP THE TRANSMITTER, CALIBRATE AND PLACE ON-LINE.
6. INSTALL THE NEW FLOW SENSOR IN PLACE OF THE EXISTING MILLETRONICS SENSOR. TURN OVER EXISTING FLOW TRANSMITTER AND SENSOR TO OWNER. INSTALL NEW 1 INCH PVC-RMC CONDUIT BETWEEN NEW CONTROL PANEL AND FLOW SENSOR/METER VAULT. ASSUME FOR 60 FEET OF PVC-RMC CONDUIT AND WIRE TO BE INSTALLED. FLOW SENSOR IS IN A NEMA 7 AREA. PROVIDE SEAL FITTINGS AS REQUIRED ON THIS CONDUIT. PROVIDE NEW STAINLESS STEEL MOUNTING HARDWARE FOR INSTALLING SENSOR OVER EXISTING FLUME. FIELD VERIFY CONDUIT ROUTING, AND EXCAVATION PRIOR TO BIDS. PATCH YARD AREA BACK TO ORIGINAL CONDITION.

TETRA TECH
www.tetratech.com
710 AVIS DRIVE
ANN ARBOR, MI 48108
PHONE: (734) 665-6000 FAX: (734) 213-3003

MARK	DATE	DESCRIPTION	BY

CITY OF KALAMAZOO, MICHIGAN
METERING STATIONS CONTROL UPGRADES

PARCHMENT
METERING STATION
ONE-LINES, DETAILS

Project No.:	200-19743-21003
Designed By:	GCJ
Drawn By:	JLS
Checked By:	MSJ/GCJ

Copyright: Tetra Tech

Bar Measures 1 inch

4/27/2022 1:01:48 PM - \\TT.LOCAL\IER\PROJECTS\ANN ARBOR\IER\19743\200-19743-21003\CAD\SHEETFILES\METERING\29_PARCHMENT_ONELINE_DETAILS.DWG - SHANK, JASON

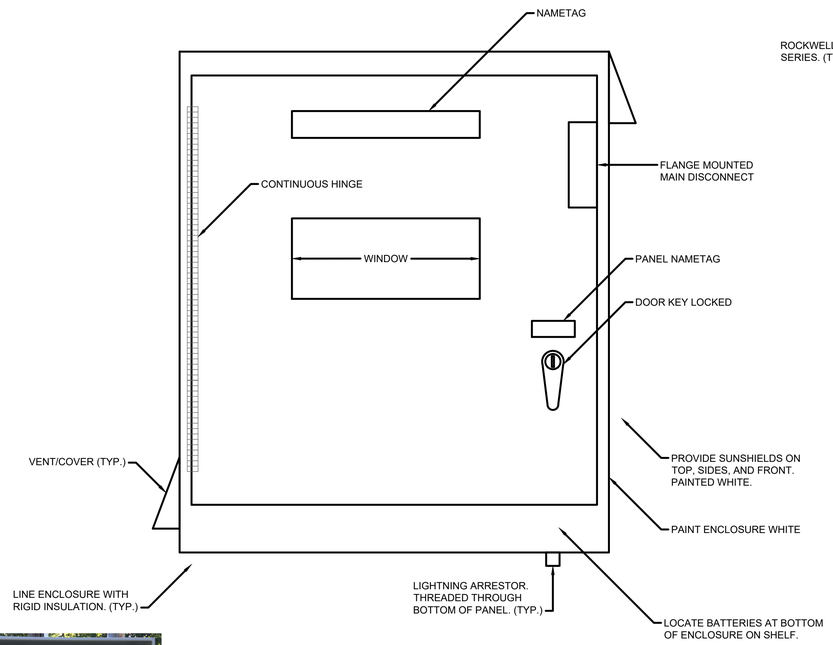

METERING STATION CONTROL PANEL LAYOUT

NEMA 4 ENCLOSURE
SIZE: 42"H X 36"W X12"D (MIN.)
PANEL TO BE CONSTRUCTED BY A UL LISTED PANEL SHOP.

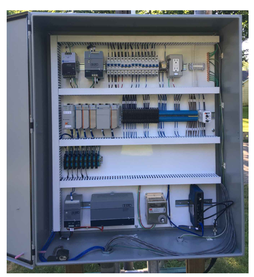

SAMPLE METERING PANEL LAYOUT

NO SCALE

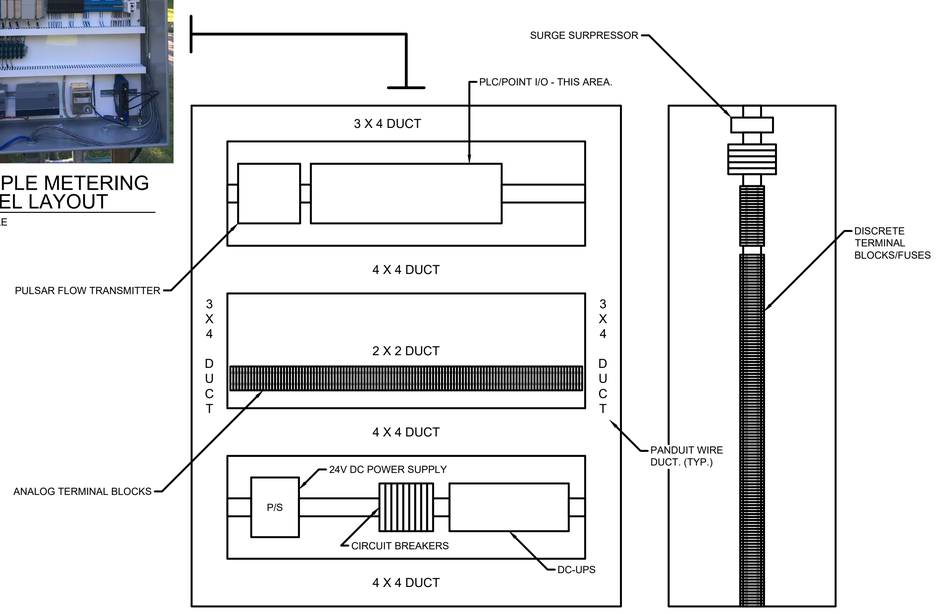

GENERAL SUBPLATE LAYOUT

PAINT INSIDE: GLOSS WHITE.
NOTE: NOT ALL SUBPLATE DEVICES ARE SHOWN.
SEE WIRING DIAGRAMS FOR ADDITIONAL REQUIREMENTS. (TYP.)

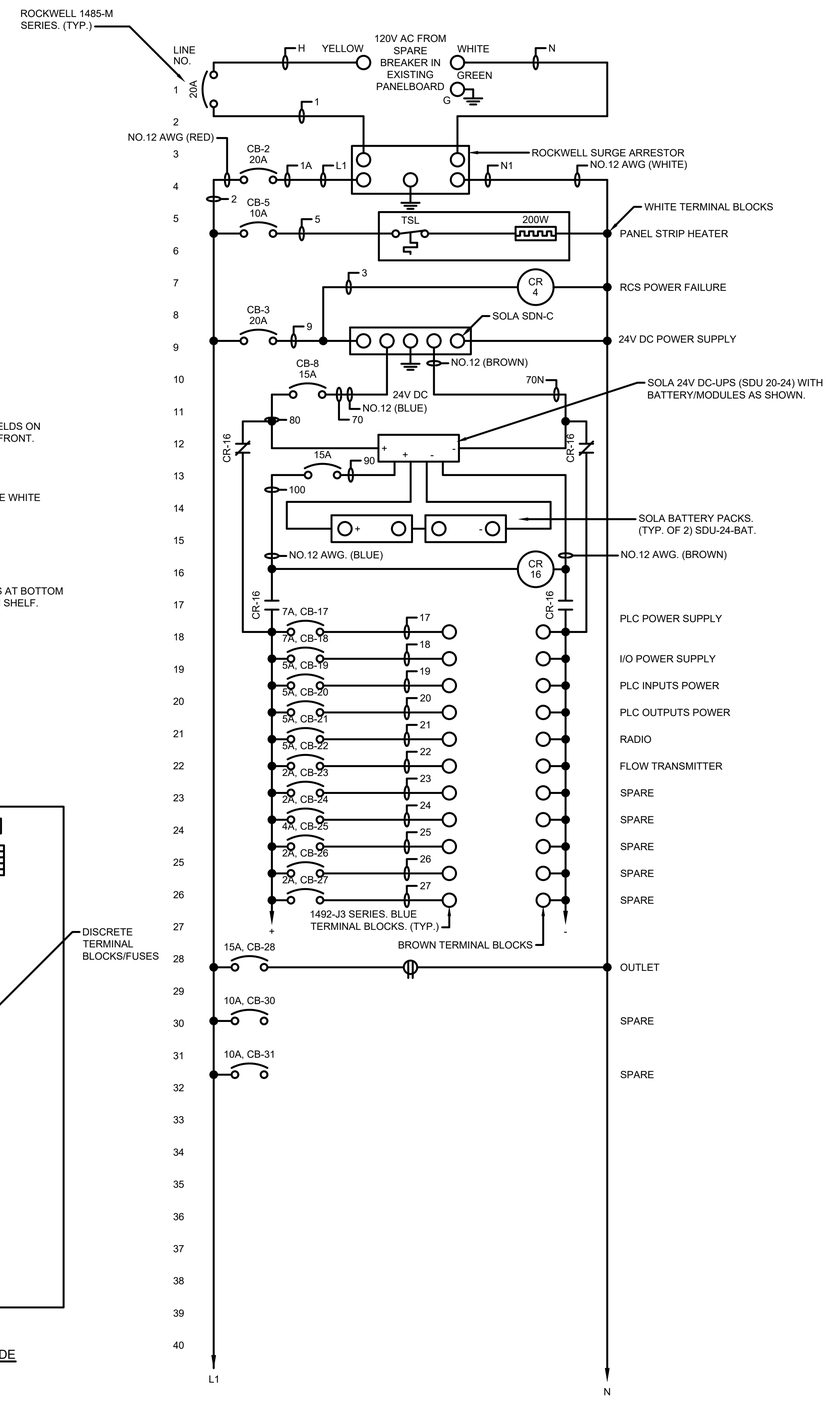

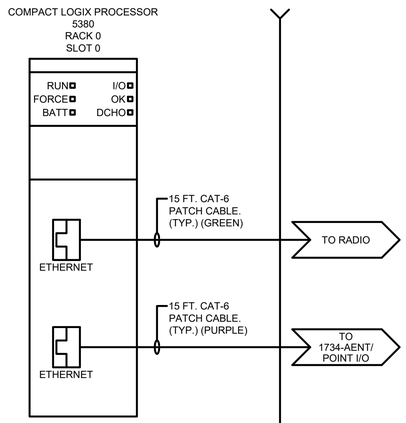

TETRA TECH
www.tetratech.com
710 AVIS DRIVE
ANN ARBOR, MI 48108
PHONE: (734) 665-6000 FAX: (734) 213-3003

MARK	DATE	DESCRIPTION	BY

CITY OF KALAMAZOO, MICHIGAN
METERING STATIONS CONTROL UPGRADES

PARCHMENT CONTROL PANEL LAYOUT, WIRING DIAGRAM

Project No.:	200-19743-21003
Designed By:	GCJ
Drawn By:	JLS
Checked By:	MSJ/GCJ

Copyright: Tetra Tech

Bar Measures 1 inch

2/21/2022 3:14:44 PM - \\TT LOCAL\IER\PROJECTS\ANN ARBOR\IER\19743\200-19743-21003\CAD\SHEETFILES\E\METERING\30_PARCHMENT_PANEL LAYOUT_WIR DIA.DWG - SHANK, JASON

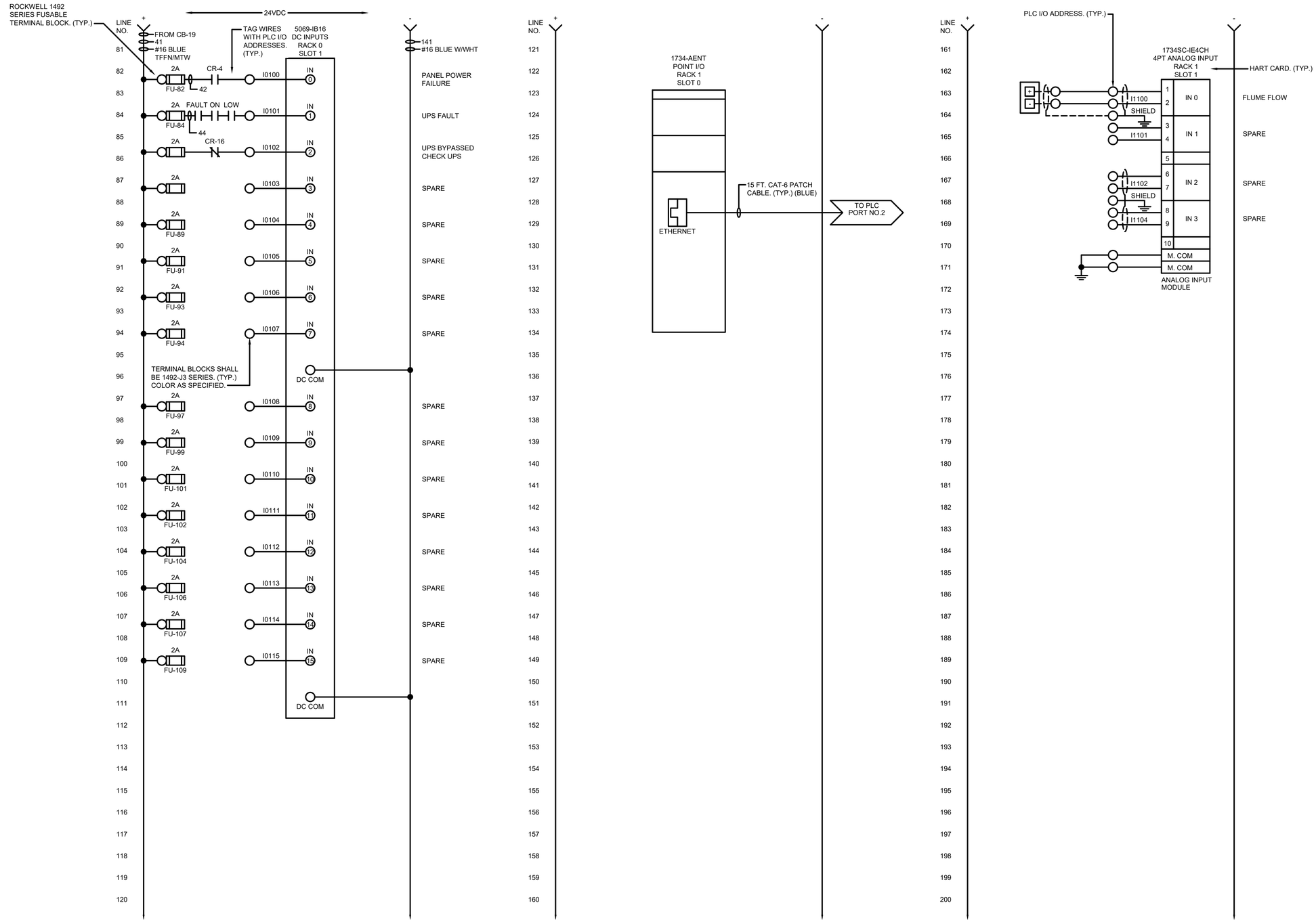

TETRA TECH

www.tetratech.com
710 AVIS DRIVE
ANN ARBOR, MI 48108
PHONE: (734) 665-6000 FAX: (734) 213-3003

MARK	DATE	DESCRIPTION	BY

CITY OF KALAMAZOO, MICHIGAN

METERING STATIONS CONTROL UPGRADES

PARCHMENT CONTROL PANEL WIRING DIAGRAM

Project No.:	200-19743-21003
Designed By:	GCJ
Drawn By:	JLS
Checked By:	MSJ/GCJ

31

OF 40

Copyright: Tetra Tech

Bar Measures 1 inch

2/21/2022 3:14:50 PM - \\TT.LOCAL\IER\PROJECTS\ANN ARBOR\IER\19743\200-19743-21003\CAD\SHEETFILES\METERING\31_PARCHMENT_PANEL WIR DIA.DWG - SHANK, JASON

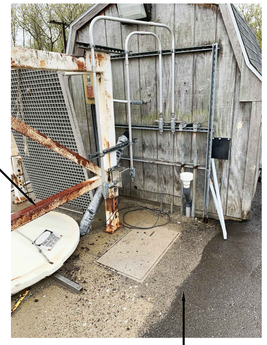

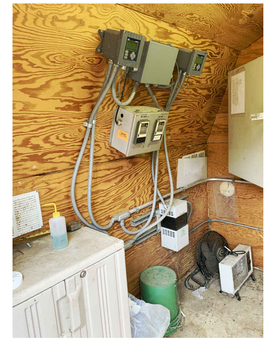

STATION PHOTOS

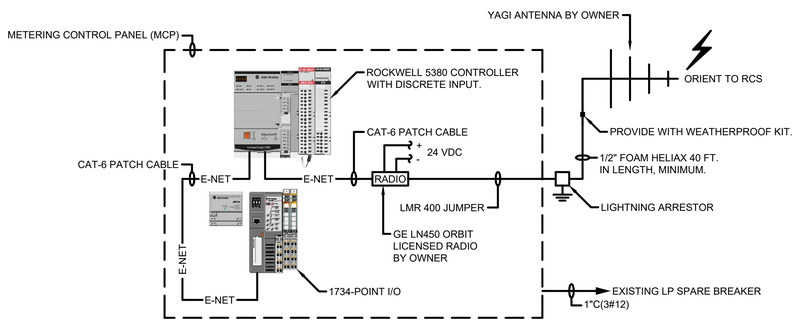

SYSTEM CONFIGURATION DRAWING

NOTE: PLC/RADIO PROGRAMMING BY OWNER/TETRATECH.

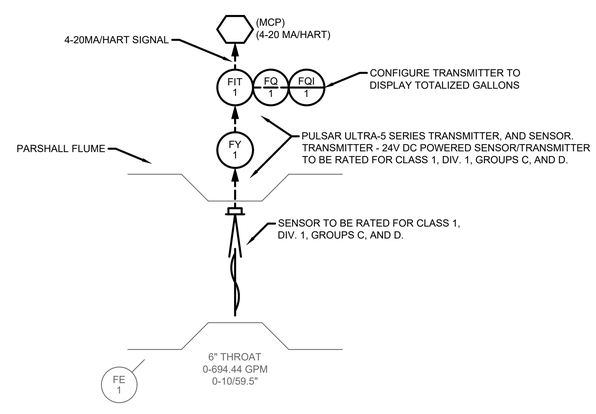

PARTIAL P&ID DIAGRAM

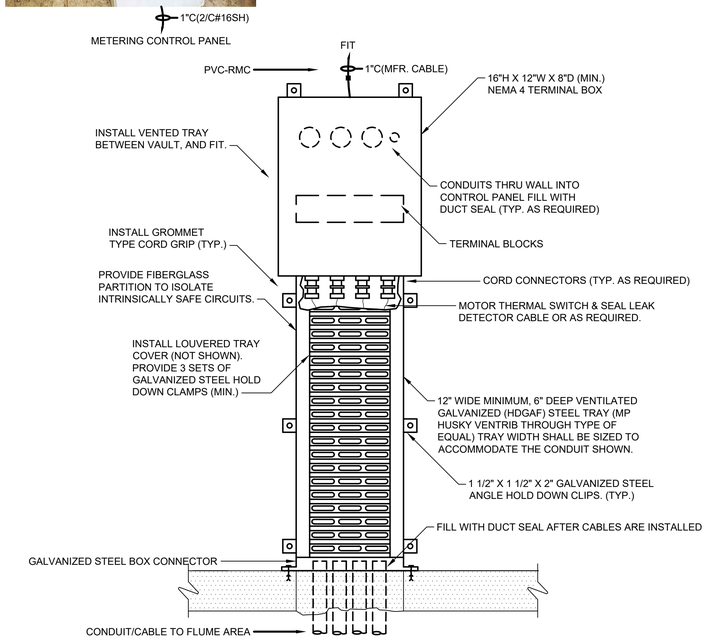

VENTED TRAY DETAIL

PARSHALL FLUME

NOTES:

1. INSTALL NEW MCP OUTSIDE EXISTING FLOW METERING SHED. MOUNT ON A 316 STAINLESS STEEL STRUT RACK. SUPPORT RACK AS REQUIRED. PROVIDE A 1 INCH CONDUIT WITH 3#12 WIRES FROM EXISTING PANELBOARD INSIDE SHED AND POWER FROM SPARE BREAKER AT EXISTING PANELBOARD. LABEL SPARE BREAKER IN PANELBOARD WITH NEW MCP DESIGNATION.
2. MOUNT THE NEW PULSAR FLOW TRANSMITTER INSIDE THE EXISTING SHED. POWER FROM 24VDC POWER SUPPLY IN NEW MCP.
3. INSTALL 2 - 1 INCH PVC-RMC CONDUITS WITH 3#12 WIRES AND 2/C#18SH CABLE TO THE NEW MCP FROM NEW FLOW TRANSMITTER.
4. FROM THE NEW MCP, INSTALL THE ½ INCH COAXIAL CABLE TO THE NEW YAGI ANTENNA. LOCATE NEW ANTENNA ON A NEW 24 FOOT LONG 2 INCH SCHEDULE 40 ALUMINUM MAST PIPE MOUNTED ON THE BACKSIDE OF THE EXISTING BUILDING. SUPPORT AS REQUIRED. GROUND MAST PIPE WITH N0.6 AWG RHW-USE WIRE. INSTALL TWO GROUND RODS IN YARD AREA NEAR EXISTING FLOW MONITORING BUILDING AND EXTERIOR MOUNTED MCP. CONNECT NO.6 WIRE TO GROUNDS RODS.
5. OBTAIN THE SERVICES OF OUDBIER CALIBRATION SERVICES TO SET UP THE TRANSMITTER, CALIBRATE AND PLACE ON-LINE.
6. INSTALL A 1 INCH PVC-RMC CONDUIT WITH MANUFACTURER CABLE, AND SEAL FITTING FROM THE EXISTING FLUME LOCATION TO THE NEW FLOW TRANSMITTER. ASSUME FOR 125 FT. OF PVC-RMC CONDUIT TO BE INSTALLED. MOUNT NEW TRANSMITTER OVER EXISTING FLOOR. FLOOR AREA IN NEMA 7. PROVIDE SEAL FITTING AS REQUIRED. PROVIDE NEW 316 STAINLESS STEEL MOUNTING HARDWARE FOR NEW SENSOR. FIELD VERIFY CONDUIT ROUTING, AND PAVEMENT CUTTING AND PATCHING PRIOR TO BIDS. PATCH WALKWAY AND YARD AREAS BACK TO ORIGINAL CONDITION.

TETRA TECH
www.tetratech.com
710 AVIS DRIVE
ANN ARBOR, MI 48108
PHONE: (734) 665-6000 FAX: (734) 213-3003

MARK	DATE	DESCRIPTION	BY

CITY OF KALAMAZOO, MICHIGAN
METERING STATIONS CONTROL UPGRADES

ALLNEX
METERING STATION
ONE-LINES, DETAILS

Project No.:	200-19743-21003
Designed By:	GCJ
Drawn By:	JLS
Checked By:	MSJ/GCJ

Copyright: Tetra Tech

Bar Measures 1 inch

4/27/2022 1:04:13 PM - \\TT LOCAL\ER\PROJECTS\ANN ARBOR\ER\19743\200-19743-21003\CAD\SHEETFILES\METERING32_ALLNEX_ONELINE_DETAILS.DWG - SHANK, JASON

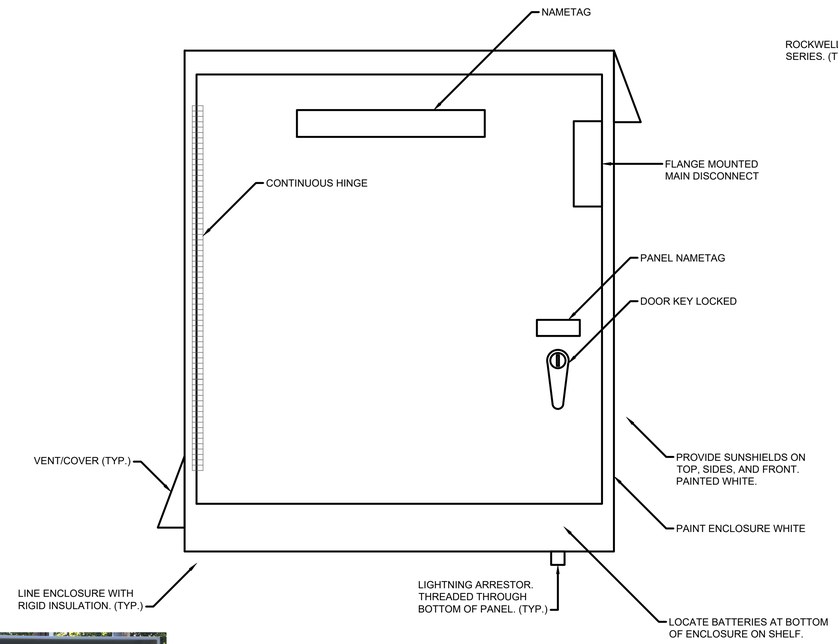

METERING STATION CONTROL PANEL LAYOUT

NEMA 4 ENCLOSURE
SIZE: 42"H X 36"W X12"D (MIN.)
PANEL TO BE CONSTRUCTED BY A UL LISTED PANEL SHOP.

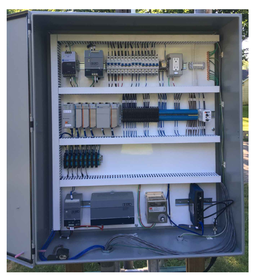

SAMPLE METERING PANEL LAYOUT

NO SCALE

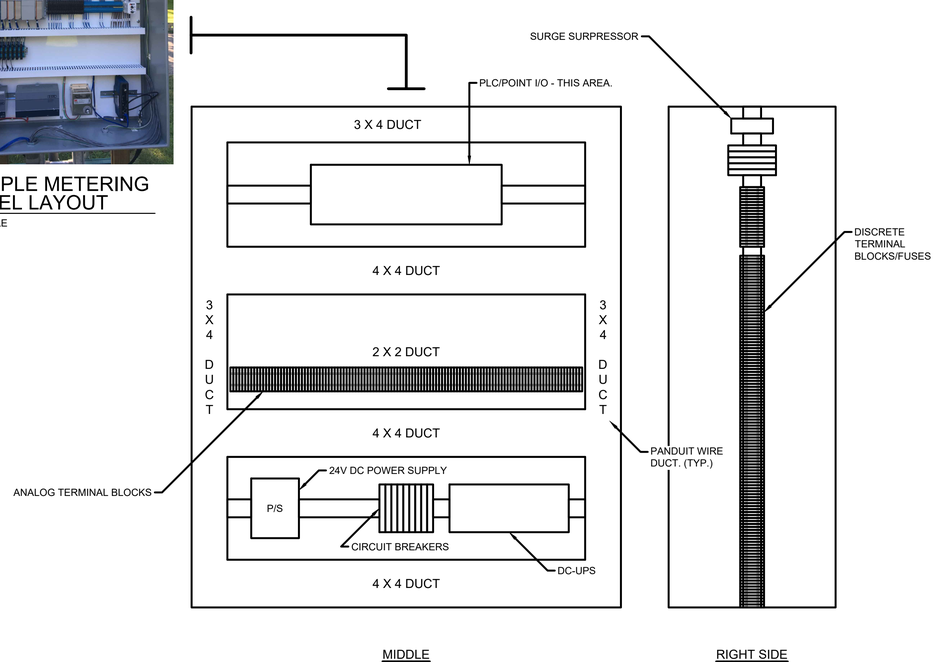

GENERAL SUBPLATE LAYOUT

PAINT INSIDE: GLOSS WHITE.
NOTE: NOT ALL SUBPLATE DEVICES ARE SHOWN.
SEE WIRING DIAGRAMS FOR ADDITIONAL REQUIREMENTS. (TYP.)

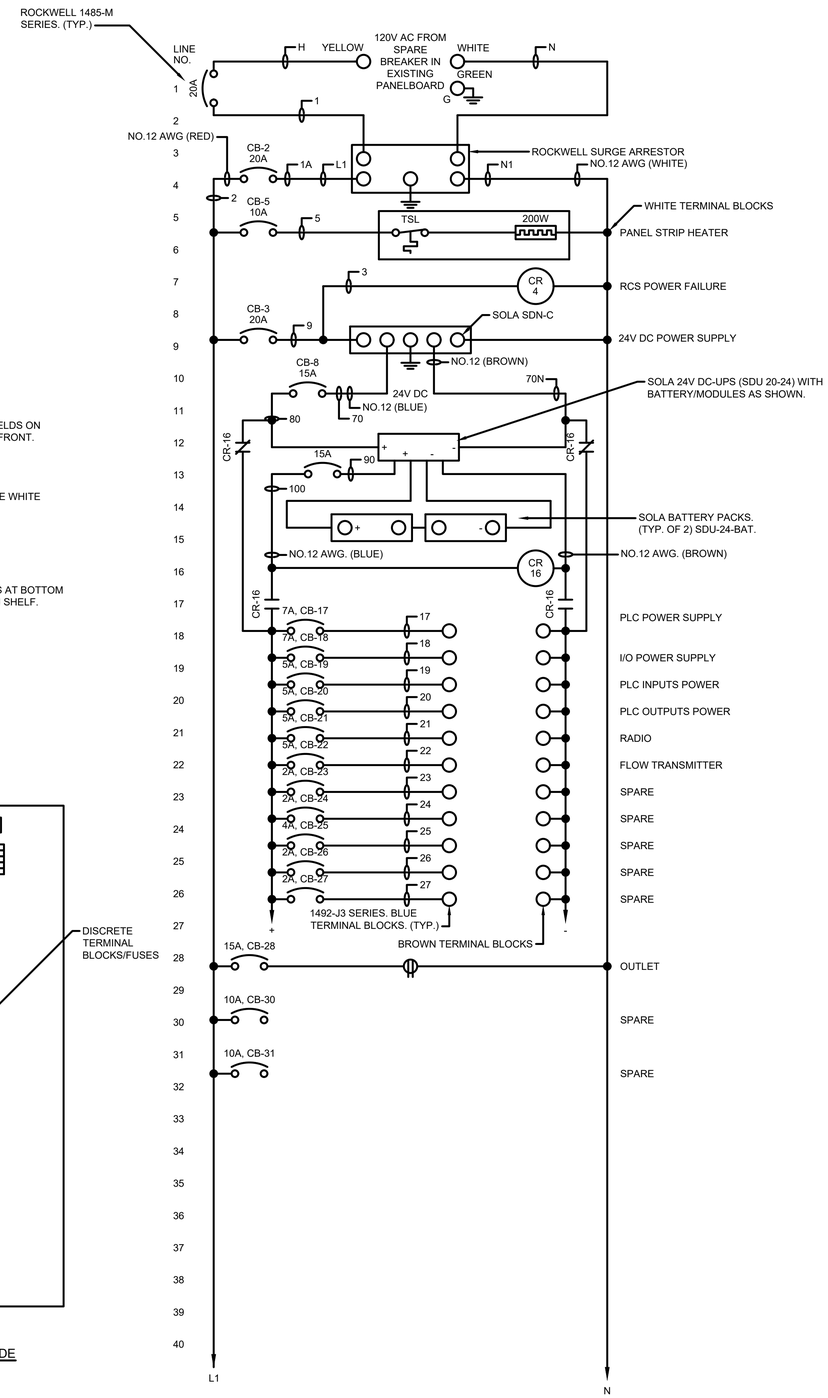

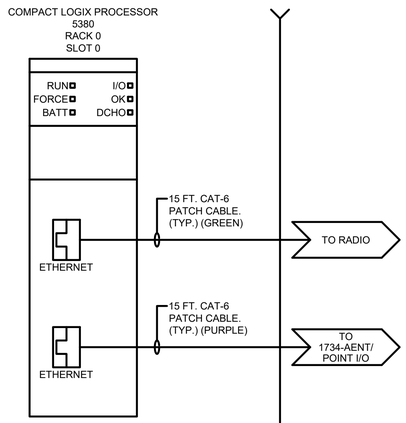

TETRA TECH
www.tetratech.com
710 AVIS DRIVE
ANN ARBOR, MI 48108
PHONE: (734) 665-6000 FAX: (734) 213-3003

MARK	DATE	DESCRIPTION	BY

CITY OF KALAMAZOO, MICHIGAN
METERING STATIONS CONTROL UPGRADES

ALLNEX CONTROL PANEL LAYOUT, WIRING DIAGRAM

Project No.:	200-19743-21003
Designed By:	GCJ
Drawn By:	JLS
Checked By:	MSJ/GCJ

Copyright: Tetra Tech

Bar Measures 1 inch

2/21/2022 3:15:12 PM - \\TT LOCAL\IER\PROJECTS\ANN ARBOR\IER\197433\200-19743-21003\CAD\SHEETFILES\E\METERING\33_ALLNEX_PANEL LAYOUT_WIR DIA.DWG - SHANK, JASON

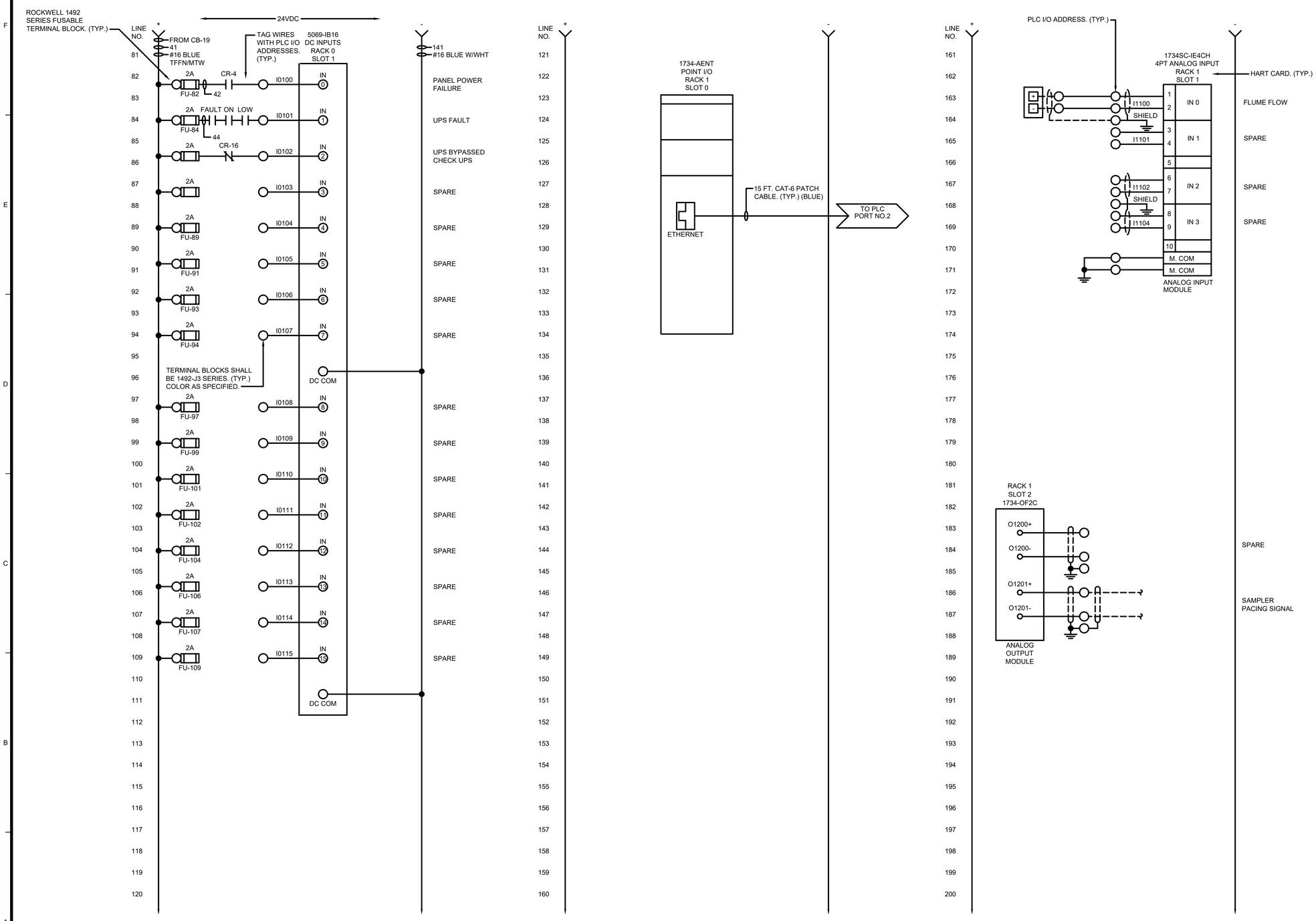

TETRA TECH

www.tetratech.com
710 AVIS DRIVE
ANN ARBOR, MI 48108
PHONE: (734) 665-6000 FAX: (734) 213-3003

MARK	DATE	DESCRIPTION	BY

CITY OF KALAMAZOO, MICHIGAN
METERING STATIONS CONTROL UPGRADES

ALLNEX CONTROL PANEL WIRING DIAGRAM

Project No.:	200-19743-21003
Designed By:	GCJ
Drawn By:	JLS
Checked By:	MSJ/GCJ

Copyright: Tetra Tech

Bar Measures 1 inch

2/21/2022 3:15:18 PM - \\TT.LOCAL\ER\PROJECTS\ANN ARBOR\ER\19743\200-19743-21003\CAD\SHEETFILES\E\METERING\34_ALLNEX_PANEL WIR DIA.DWG - SHANK, JASON

STATION PHOTOS

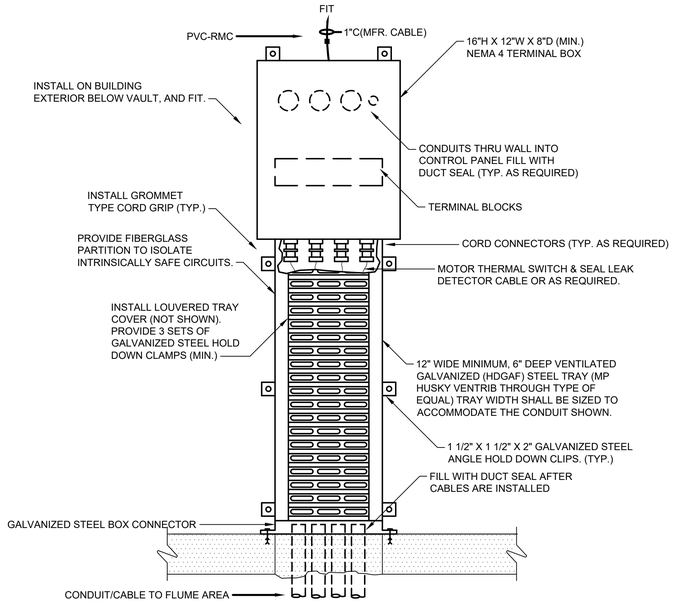

VENTED TRAY DETAIL

PARSHALL FLUME

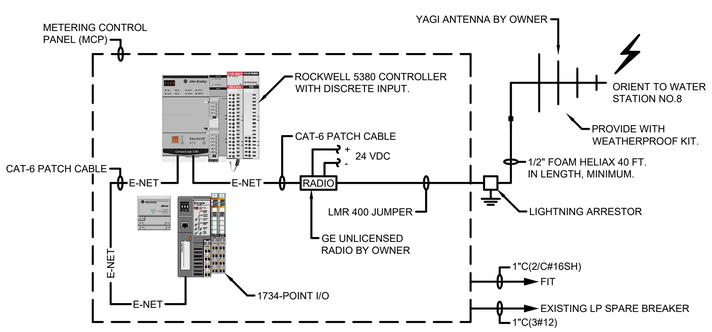

SYSTEM CONFIGURATION DRAWING

NOTE: PLC/RADIO PROGRAMMING BY OWNER/TETRATECH.

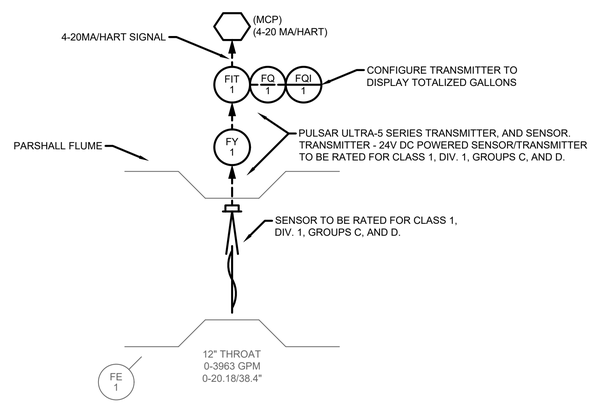

PARTIAL P&ID DIAGRAM

NOTES:

1. INSTALL NEW MCP INSIDE EXISTING FLOW METERING SHED. PROVIDE A 1 INCH CONDUIT WITH 3#12 WIRES AND POWER FROM SPARE BREAKER WITHIN EXISTING PANELBOARD INSIDE FLOW MONITORING SHED. LABEL SPARE BREAKER IN PANELBOARD WITH NEW MCP DESIGNATION.
2. MOUNT THE NEW PULSAR FLOW TRANSMITTER ON EXISTING PLYWOOD BACKBOARD. POWER FROM 24VDC POWER SUPPLY IN NEW MCP. TURN OVER EXISTING TRANSMITTER, AND SENSOR TO OWNER.
3. INSTALL 2 - 1 INCH CONDUITS WITH 3#12, AND 2/C#18SH CABLE TO THE NEW MCP.
4. FROM THE NEW MCP, INSTALL THE ½ INCH COAXIAL CABLE TO THE NEW YAGI ANTENNA. LOCATE NEW ANTENNA ON A NEW 24 FOOT LONG 2 INCH ALUMINUM SCHEDULE 40 MASTPIPE MOUNTED ON BACKSIDE OF EXISTING STRUCTURE. GROUND MAST PIPE WITH N0.6 AWG RHW-USE WIRE. INSTALL TWO GROUND RODS IN YARD AREA NEAR EXISTING FLOW MONITORING BUILDING AND EXTERIOR MOUNTED MCP. CONNECT NO.6 WIRE TO GROUNDS RODS.
5. OBTAIN THE SERVICES OF OUDBIER CALIBRATION SERVICES TO SET UP THE TRANSMITTER, CALIBRATE AND PLACE ON-LINE.
6. INSTALL THE NEW FLOW SENSOR IN PLACE OF THE EXISTING MILLETRONICS SENSOR. TURN OVER EXISTING FLOW TRANSMITTER AND SENSOR TO OWNER. INSTALL NEW 1 INCH PVC-RMC CONDUIT, AND SEAL FITTING BETWEEN METERING BUILDING AND FLOW SENSOR/METER VAULT. ASSUME FOR 75 FEET OF CONDUIT AND WIRE TO BE INSTALLED. FLOW SENSOR IS IN A NEMA 7 AREA. PROVIDE SEAL FITTINGS AS REQUIRED ON THIS CONDUIT. PROVIDE NEW STAINLESS STEEL MOUNTING HARDWARE FOR INSTALLING SENSOR OVER EXISTING FLUME. FIELD VERIFY CONDUIT ROUTING, AND PAVEMENT CUTTING AND PATCHING PRIOR TO BIDS. PATCH WALKWAY AND YARD AREAS BACK TO ORIGINAL CONDITION.

TETRA TECH
www.tetratech.com
710 AVIS DRIVE
ANN ARBOR, MI 48108
PHONE: (734) 665-6000 FAX: (734) 213-3003

MARK	DATE	DESCRIPTION	BY

CITY OF KALAMAZOO, MICHIGAN
METERING STATIONS CONTROL UPGRADES

PORTAGE CREEK
METERING STATION
ONE-LINES, DETAILS

Project No.:	200-19743-21003
Designed By:	GCJ
Drawn By:	JLS
Checked By:	MSJ/GCJ

Copyright: Tetra Tech

Bar Measures 1 inch

4/27/2022 1:24:14 PM - \\TT.LOCAL\IER\PROJECTS\ANN ARBOR\IER\19743\200-19743-21003\CAD\SHEETFILES\EMETERING\35_PORTAGE CREEK_ONELINE_DETAILS.DWG - SHANK, JASON

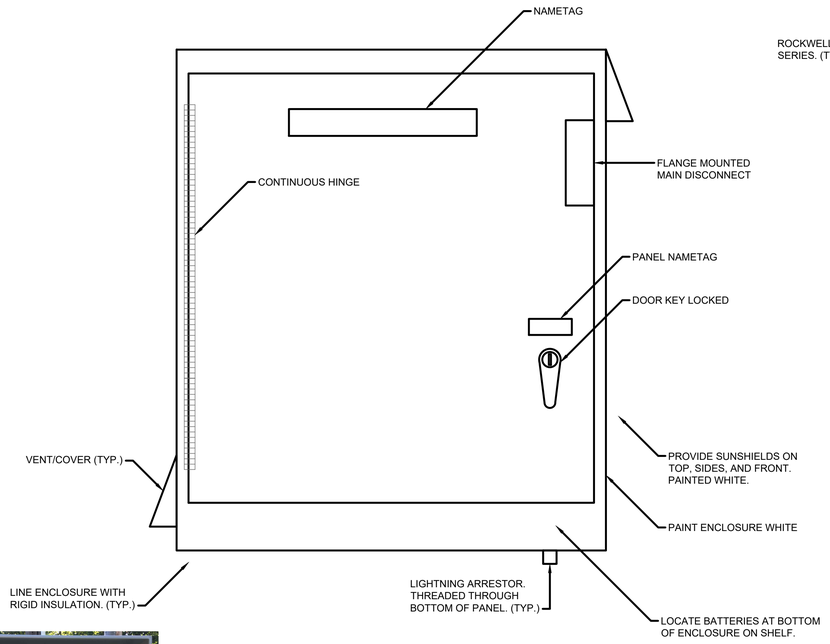

METERING STATION CONTROL PANEL LAYOUT

NEMA 4 ENCLOSURE
SIZE: 42"H X 36"W X12"D (MIN.)
PANEL TO BE CONSTRUCTED BY A UL LISTED PANEL SHOP.

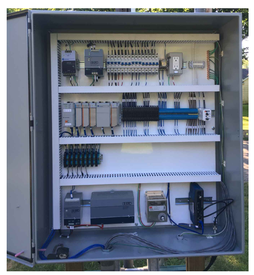

SAMPLE METERING PANEL LAYOUT

NO SCALE

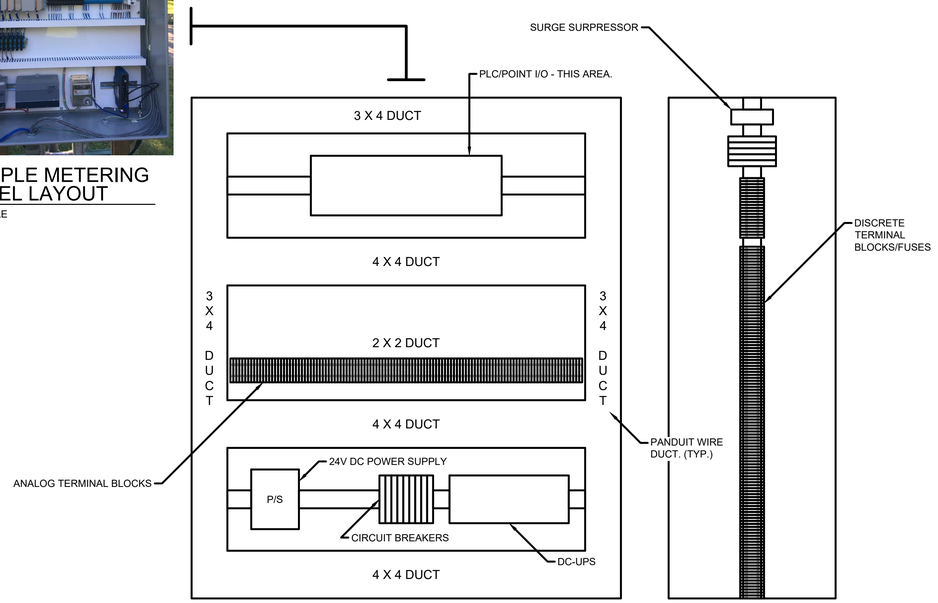

GENERAL SUBPLATE LAYOUT

PAINT INSIDE: GLOSS WHITE.
NOTE: NOT ALL SUBPLATE DEVICES ARE SHOWN.
SEE WIRING DIAGRAMS FOR ADDITIONAL REQUIREMENTS. (TYP.)

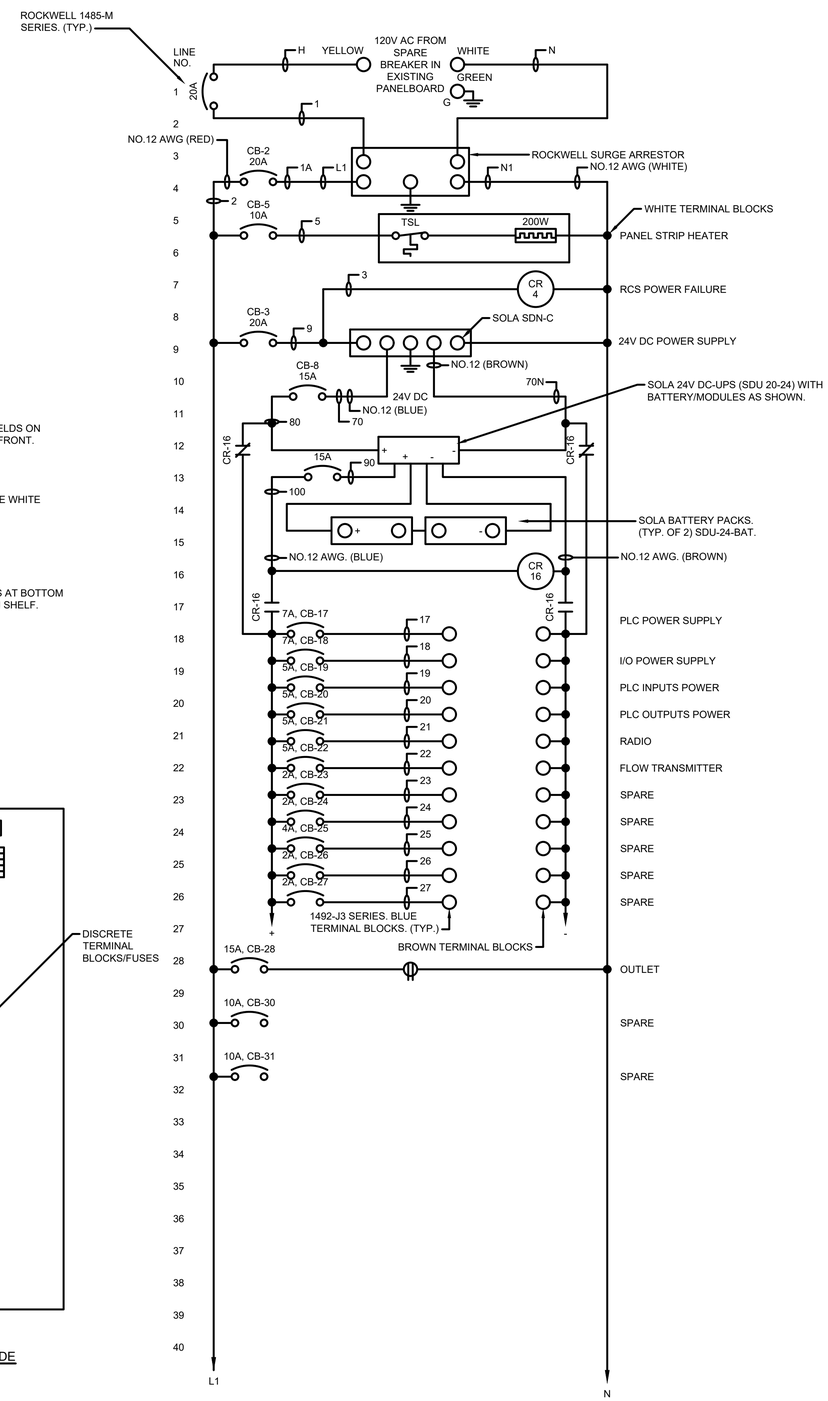

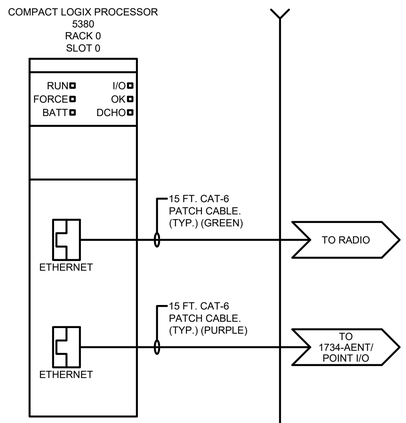

TETRA TECH
www.tetratech.com
710 AVIS DRIVE
ANN ARBOR, MI 48108
PHONE: (734) 665-6000 FAX: (734) 213-3003

MARK	DATE	DESCRIPTION	BY

CITY OF KALAMAZOO, MICHIGAN
METERING STATIONS CONTROL UPGRADES

PORTAGE CREEK CONTROL PANEL LAYOUT, WIRING DIAGRAM

Project No.:	200-19743-21003
Designed By:	GCJ
Drawn By:	JLS
Checked By:	MSJ/GCJ

Copyright: Tetra Tech

Bar Measures 1 inch

2/21/2022 3:15:50 PM - \\TT.LOCAL\IER\PROJECTS\ANN ARBOR\IER\197432\200-19743-21003\CAD\SHEETFILES\EMETERING\36_PORTAGE CREEK_PANEL LAYOUT_WIR DIA.DWG - SHANK, JASON

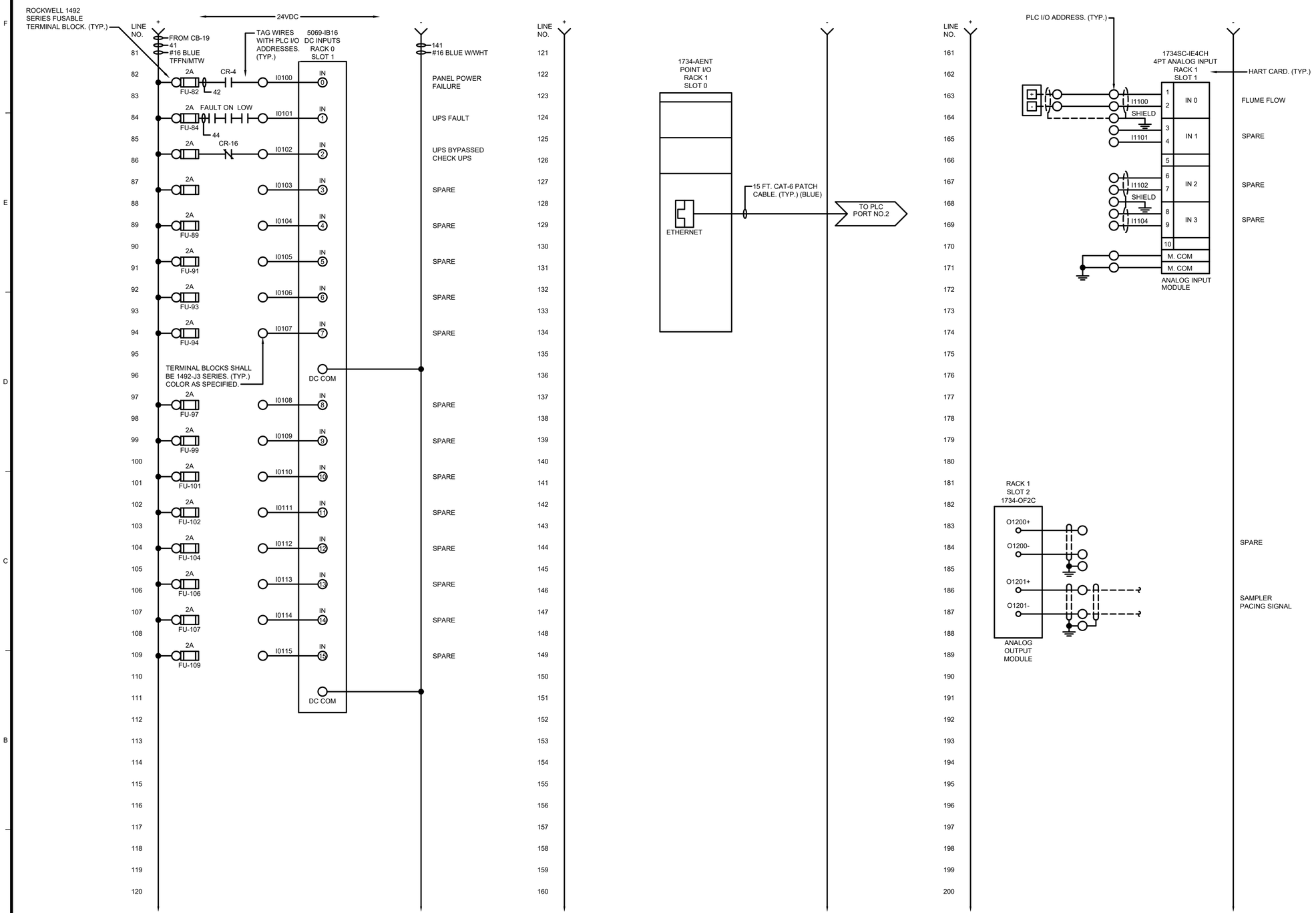

TETRA TECH

www.tetratech.com
710 AVIS DRIVE
ANN ARBOR, MI 48108
PHONE: (734) 665-6000 FAX: (734) 213-3003

MARK	DATE	DESCRIPTION	BY

CITY OF KALAMAZOO, MICHIGAN
METERING STATIONS CONTROL UPGRADES

PORTAGE CREEK CONTROL PANEL WIRING DIAGRAM

Project No.:	200-19743-21003
Designed By:	GCJ
Drawn By:	JLS
Checked By:	MSJ/GCJ

Copyright: Tetra Tech

Bar Measures 1 inch

2/21/2022 3:15:57 PM - \\TT.LOCAL\IER\PROJECTS\ANN ARBOR\IER\19743\200-19743-21003\CAD\SHEETFILES\METERING\37_PORTAGE CREEK_PANEL WIR DIA.DWG - SHANK, JASON

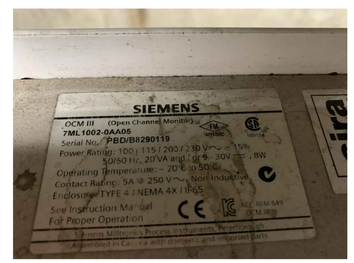

STATION PHOTOS

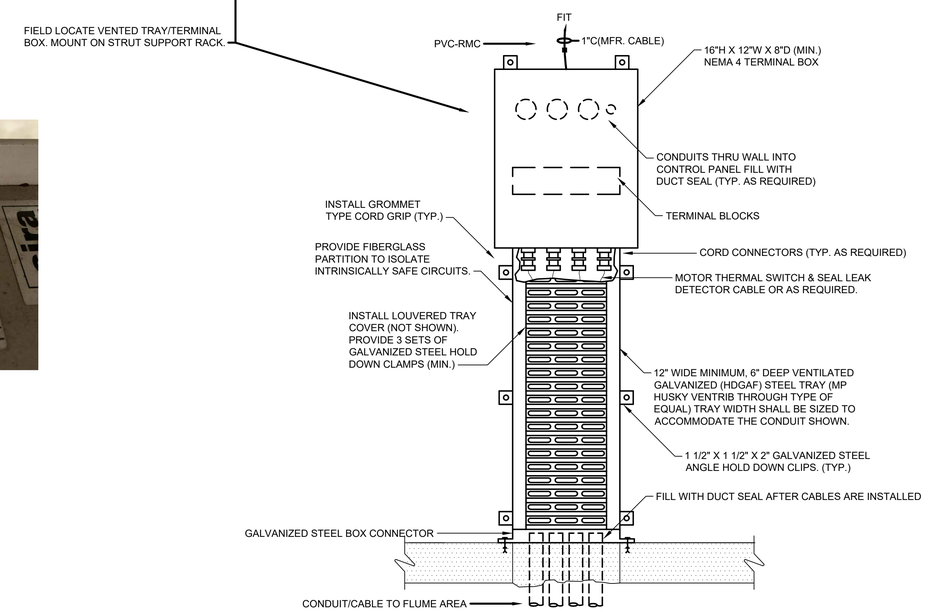

VENTED TRAY DETAIL

PARSHALL FLUME

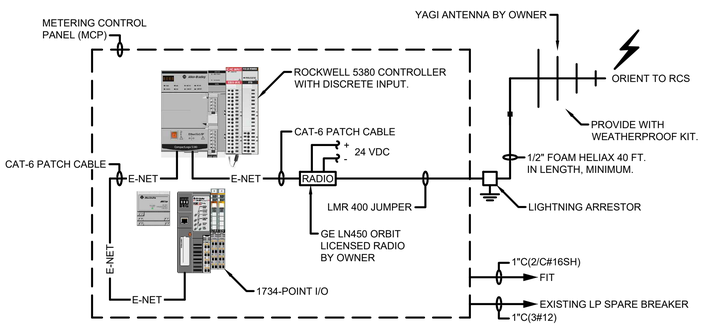

SYSTEM CONFIGURATION DRAWING

NOTE: PLC/RADIO PROGRAMMING BY OWNER/TETRATECH.

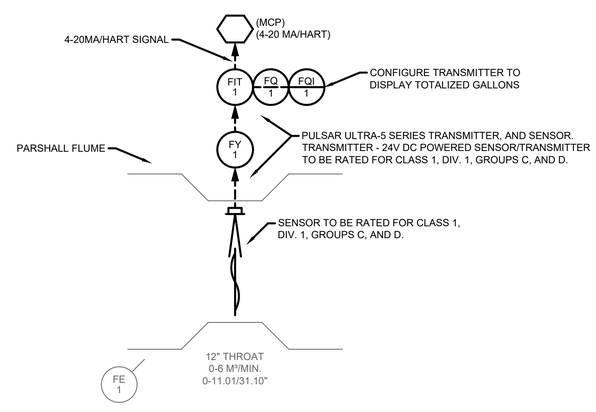

PARTIAL P&ID DIAGRAM

NOTES:

1. INSTALL NEW MCP OUTSIDE ON A NEW 316 STAINLESS STEEL STRUT SUPPORT RACK. SECURE RACK TO CONCRETE PAD. PROVIDE A 1 INCH CONDUIT WITH 3#12 WIRES AND POWER FROM EXISTING PANELBOARD. LABEL SPARE BREAKER IN PANELBOARD WITH NEW MCP DESIGNATION.
2. MOUNT THE NEW PULSAR FLOW TRANSMITTER INSIDE THE NEW METERING CABINET. POWER FROM 24VDC POWER SUPPLY IN NEW MCP.
3. FROM THE NEW MCP, INSTALL THE ½ INCH COAXIAL CABLE TO THE NEW YAGI ANTENNA. LOCATE NEW ANTENNA ON A NEW 24 FOOT LONG 2 INCH SCHEDULE 80 ALUMINUM MAST PIPE MOUNTED ON THE BACKSIDE OF THE NEW STRUT SUPPORT RACK. GROUND MAST PIPE WITH N0.6 AWG RHW-USE WIRE. INSTALL TWO GROUND RODS IN YARD AREA NEAR EXISTING FLOW CHAMBER. CONNECT NO.6 WIRE TO GROUNDS RODS.
4. SUPPORT PANEL WITH A NEW STRUT RACK, CONCRETE ENCASED.
5. OBTAIN THE SERVICES OF OUDBIER CALIBRATION SERVICES TO SET UP THE TRANSMITTER, CALIBRATE AND PLACE ON-LINE.
6. INSTALL THE NEW FLOW SENSOR IN PLACE OF THE EXISTING ULTRASONIC SENSOR. TURN OVER EXISTING FLOW TRANSMITTER AND SENSOR TO OWNER. INSTALL NEW 1 INCH PVC-RMC CONDUIT BETWEEN NEW CONTROL PANEL AND FLOW SENSOR. ASSUME FOR 75 FEET OF CONDUIT AND WIRE TO BE INSTALLED. FLOW SENSOR IS IN A NEMA 7 AREA. PROVIDE SEAL FITTINGS AS REQUIRED ON THIS CONDUIT. PROVIDE NEW STAINLESS STEEL MOUNTING HARDWARE FOR INSTALLING SENSOR OVER EXISTING FLUME. FIELD VERIFY CONDUIT ROUTING, AND EXCAVATION PRIOR TO BIDS. PATCH YARD AREA BACK TO ORIGINAL CONDITION.
7. INSTALL NEW VENTED TRAY BETWEEN CONTROL PANEL, AND FLUME.

TETRA TECH
www.tetratech.com
710 AVIS DRIVE
ANN ARBOR, MI 48108
PHONE: (734) 665-6000 FAX: (734) 213-3003

MARK	DATE	DESCRIPTION	BY

CITY OF KALAMAZOO, MICHIGAN
METERING STATIONS CONTROL UPGRADES

MEREDITH
METERING STATION
ONE-LINES, DETAILS

Project No.:	200-19743-21003
Designed By:	GCJ
Drawn By:	JLS
Checked By:	MSJ/GCJ

Copyright: Tetra Tech

Bar Measures 1 inch

4/27/2022 1:10:03 PM - \\TT.LOCAL\ER\PROJECTS\ANN ARBOR\ER\197432\00-19743-21003\CAD\SHEETFILES\EMETERING\38_MEREDITH_ONELINE_DETAILS.DWG - SHANK, JASON

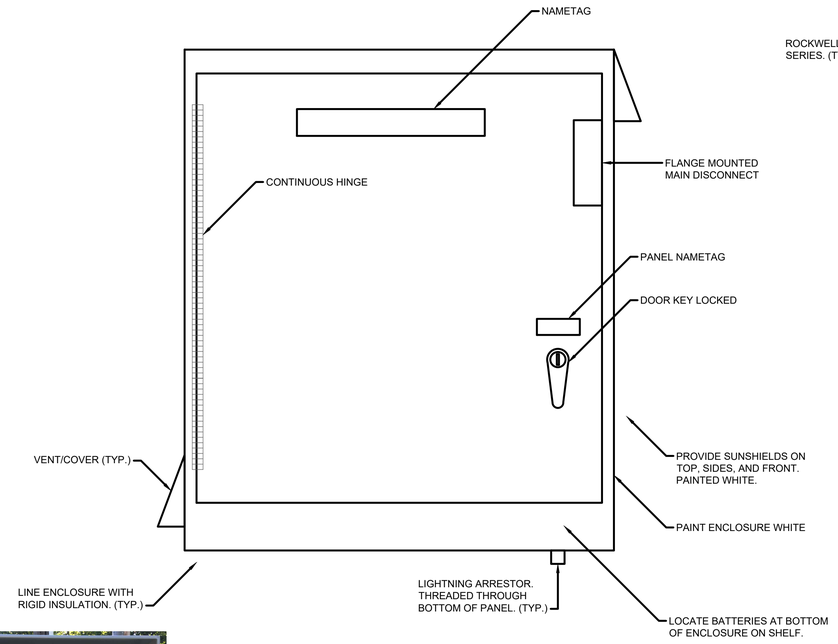

METERING STATION CONTROL PANEL LAYOUT

NEMA 4 ENCLOSURE
SIZE: 42"H X 36"W X12"D (MIN.)
PANEL TO BE CONSTRUCTED BY A UL LISTED PANEL SHOP.

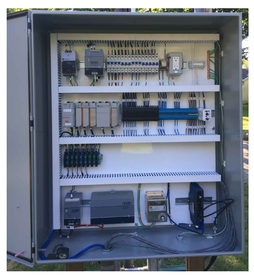

SAMPLE METERING PANEL LAYOUT

NO SCALE

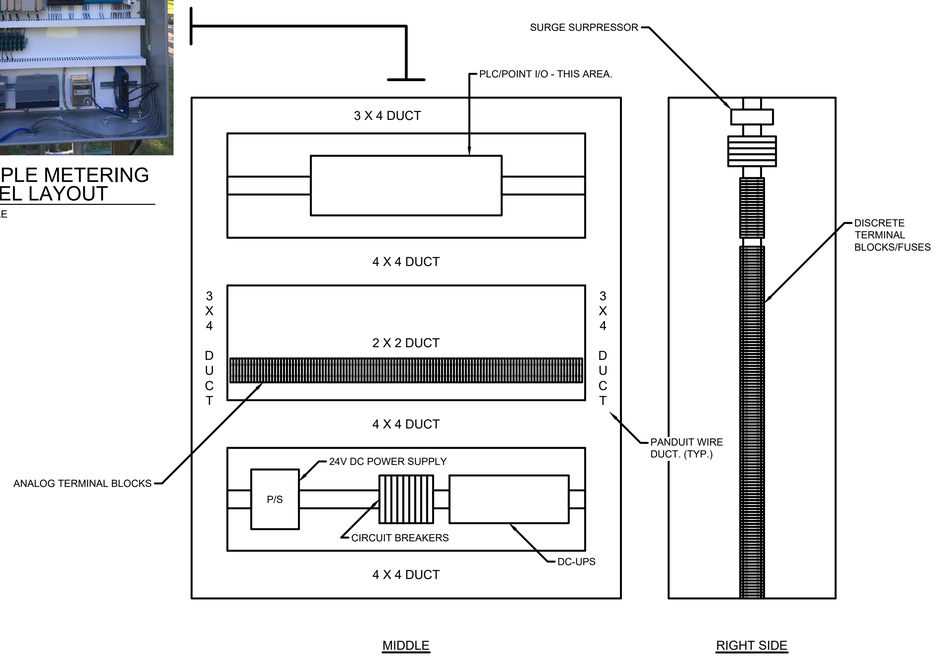

GENERAL SUBPLATE LAYOUT

PAINT INSIDE: GLOSS WHITE.
NOTE: NOT ALL SUBPLATE DEVICES ARE SHOWN.
SEE WIRING DIAGRAMS FOR ADDITIONAL REQUIREMENTS. (TYP.)

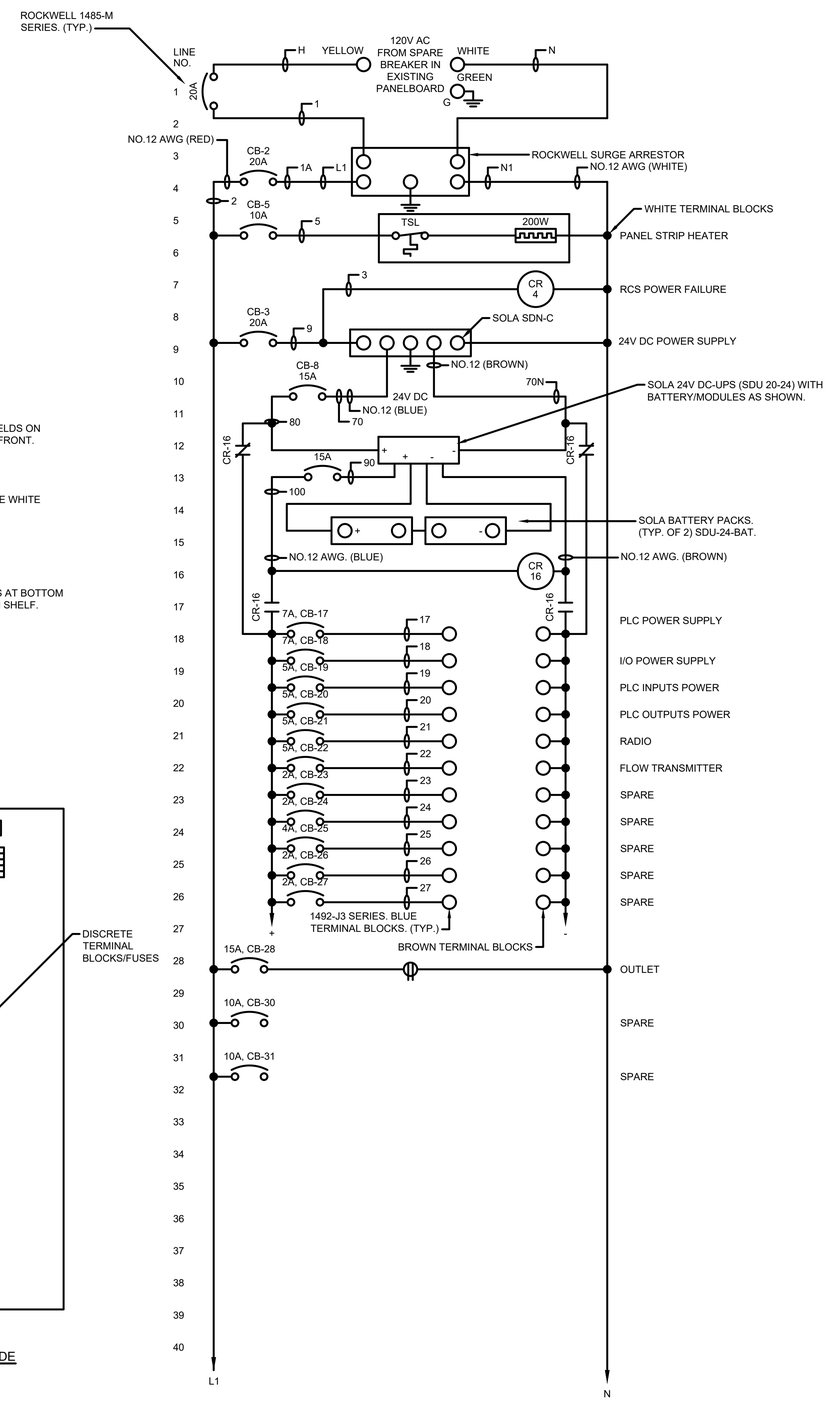

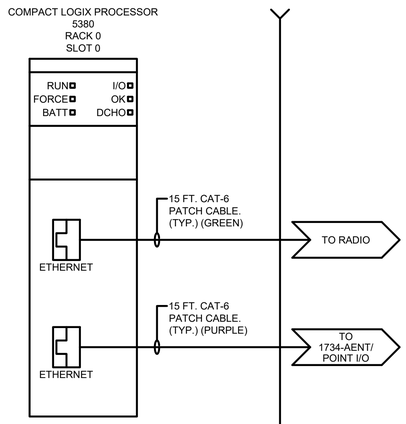

TETRA TECH
www.tetratech.com
710 AVIS DRIVE
ANN ARBOR, MI 48108
PHONE: (734) 665-6000 FAX: (734) 213-3003

MARK	DATE	DESCRIPTION	BY

CITY OF KALAMAZOO, MICHIGAN
METERING STATIONS CONTROL UPGRADES

MEREDITH CONTROL PANEL LAYOUT, WIRING DIAGRAM

Project No.:	200-19743-21003
Designed By:	GCJ
Drawn By:	JLS
Checked By:	MSJ/GCJ

Copyright: Tetra Tech

Bar Measures 1 inch

2/21/2022 3:16:30 PM - \\TT.LOCAL\IER\PROJECTS\ANN ARBOR\IER\197743200-19743-21003\CAD\SHEETFILES\EMETERING\39_MEREDITH_PANEL LAYOUT_WIR DIA.DWG - SHANK, JASON

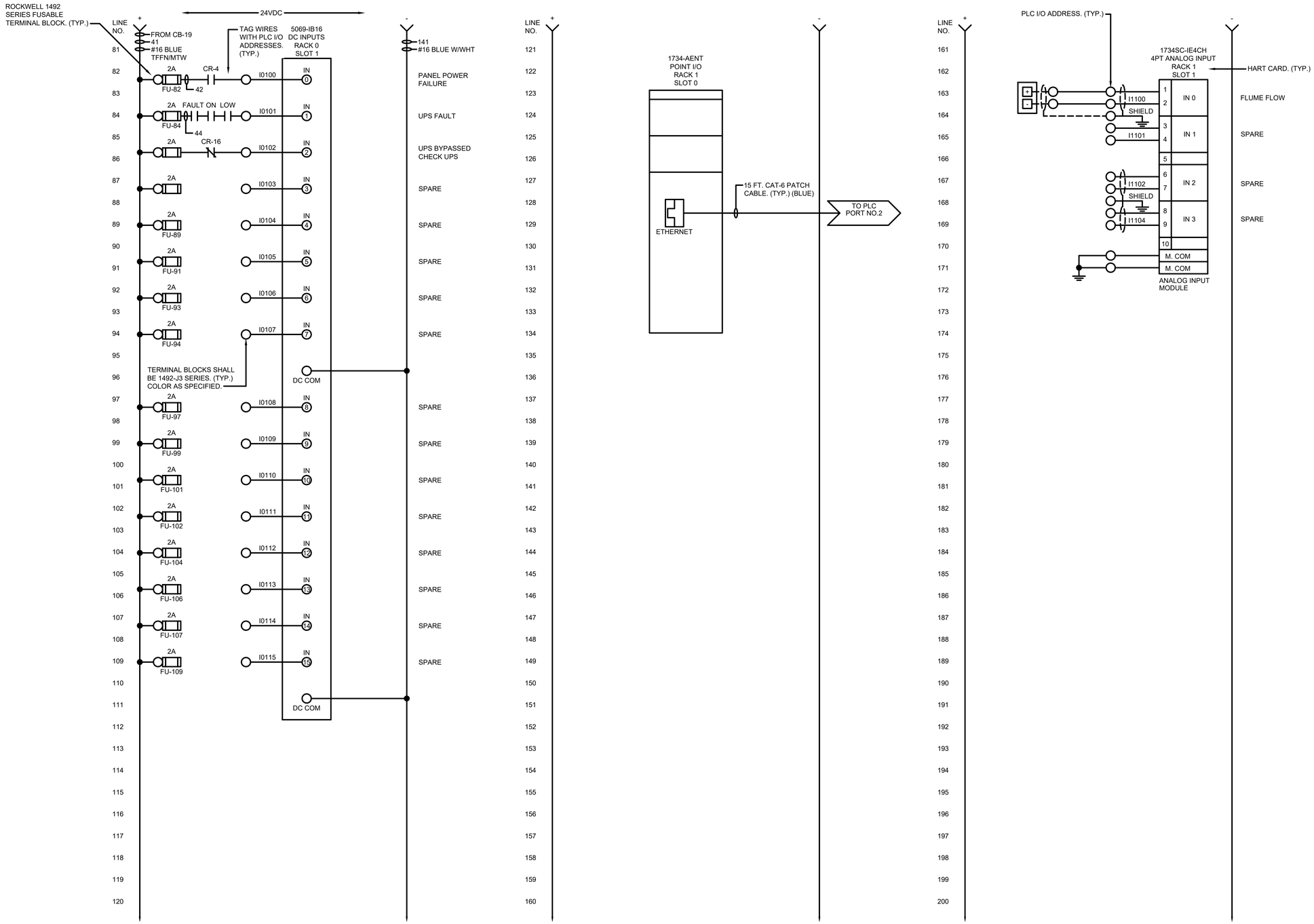

TETRA TECH
www.tetratech.com
710 AVIS DRIVE
ANN ARBOR, MI 48108
PHONE: (734) 665-6000 FAX: (734) 213-3003

MARK	DATE	DESCRIPTION	BY

CITY OF KALAMAZOO, MICHIGAN

METERING STATIONS CONTROL UPGRADES

MEREDITH CONTROL PANEL WIRING DIAGRAM

Project No.:	200-19743-21003
Designed By:	GCJ
Drawn By:	JLS
Checked By:	MSJ/GCJ

Copyright: Tetra Tech

Bar Measures 1 inch

2/21/2022 3:16:35 PM - \\TT LOCAL\IER\PROJECTS\ANN ARBOR\IER\19743\200-19743-21003\CAD\SHEETFILES\E\METERING\40_MEREDITH_PANEL WIR DIA.DWG - SHANK, JASON